HP ProLiant DL380 Generation 3 Server User Guide

July 2003 (Third Edition)
Part Number 303130-003

© 2003 Hewlett-Packard Development Company, L.P.

Microsoft, MS-DOS, Windows, and Windows NT are trademarks of Microsoft Corporation in the U.S. and other countries.

Intel and Xeon are trademarks of Intel Corporation in the U.S. and other countries.

Hewlett-Packard Company shall not be liable for technical or editorial errors or omissions contained herein. The information in this document is provided “as is” without warranty of any kind and is subject to change without notice. The warranties for HP products are set forth in the express limited warranty statements accompanying such products. Nothing herein should be construed as constituting an additional warranty.

July 2003 (Third Edition)

Part Number 303130-003

Audience Assumptions

This guide is for the person who installs, administers, and troubleshoots servers. HP assumes you are qualified in the servicing of computer equipment and trained in recognizing hazards in products with hazardous energy levels.

Contents

Server Component Identification 9

Server Features 9
Front Panel Components 10
Front Panel LEDs and Buttons 11
Rear Panel Components 13
Rear Panel LEDs and Buttons 15
System Board Components 17
System Maintenance Switch 18
NMI Switch 18
Chassis ID Switch 19
DIMM Slots 19
System Board LEDs 20
System LEDs and Internal Health LED Combinations 22
SCSI Backplane Components 24
SCSI Backplane LEDs 25
Hot-Plug SCSI Hard Drive LEDs 26
Hot-Plug SCSI Hard Drive LED Combinations 28
Internal PCI Hot Plug LEDs and Button 29
PCI Hot Plug LED Status Combinations 30
PCI Riser Cage LED 31
Remote Management Connector 31
Identifying Hot-Plug Fans 32
Hot-Plug Fan LED 33
Power Converter Module LED 34
Battery-Backed Write Cache Enabler LEDs 34
Battery-Backed Write Cache Enabler LED Statuses 35

Server Operations 37

Powering Up the Server 37
Powering Down the Server 37
Extending the Server from the Rack 38
Removing the Access Panel 40
Installing the Access Panel 40
Removing the PCI Riser Cage 40
Installing the PCI Riser Cage 42

Server Setup 45

Optional Installation Services 45
Rack Planning Resources 46
Optimum Environment 47
Space and Airflow Requirements 47
Temperature Requirements 48
Power Requirements 49
Electrical Grounding Requirements 50
Rack Warnings 50
Identifying the Contents of the Server Shipping Carton 51
Installing Hardware Options 52
Installing the Server into the Rack 52
Powering Up and Configuring the Server 62
Installing the Operating System 63
Registering the Server 63

Hardware Options Installation 65

Introduction 65
Processor Option 65
Memory Options 69
Online Spare Memory Configuration 70
DIMM Installation Guidelines 70
Installing DIMMs 71
Hot-Plug SCSI Hard Drive Options 72
SCSI IDs 72
Removing a Hard Drive Blank 73
Removing a Hot-Plug SCSI Hard Drive 74
Installing a Hot-Plug SCSI Hard Drive 74
Hot-Plug Tape Drive Option 75
Battery-Backed Write Cache Enabler Option 77
Redundant Hot-Plug Fans 79
Installation Requirements 81
Identifying Hot-Plug Fans 81
Installing Redundant Hot-Plug Fans 82
Redundant Hot-Plug AC Power Supply Option 84
DC Power Supply Option 87
Expansion Board Options 91
Removing Expansion Slot Cover 1 91
Removing Expansion Slot Covers 2 and 3 92
Installing a Non-Hot-Plug Expansion Board 94
Installing PCI Hot Plug Expansion Boards 95

Server Cabling 99

Hot-Plug SCSI Hard Drive Cabling 99

Integrated Simplex SCSI Cabling 100
Integrated Duplex SCSI Cabling 101
PCI Simplex SCSI Cabling 101
PCI Duplex SCSI Cabling 102
Installing the SCSI Terminator Board 103
Removing the SCSI Terminator Board 104
CD-ROM Drive Cabling 105
Diskette Drive Cabling 106
Power Button/LED Cabling 106
PCI Hot Plug Backplane Cabling 107
RILOE II Cabling 108
Internal Power Cabling 108
External Storage Cabling 109

Server Configuration and Utilities 111

ROM-Based Setup Utility 111
Using RBSU 112
Auto-Configuration Process 116
Boot Options 117
Configuring Online Spare Memory 118
Re-Entering the Server Serial Number 118
Redundant ROM Support 119
Safety and Security Benefits 119
Access to Redundant ROM Settings 119
ROMPaq Utility 120
System Online ROM Flash Component Utility 121
USB Support 121
SmartStart Software 122
SmartStart Autorun Menu 122
SmartStart Scripting Toolkit 123
Enterprise Diagnostics LX32 Utility 124
Drivers 124
Option ROM Configuration for Arrays 124
Management Agents 125
Insight Manager 7 125
Automatic Server Recovery-2 126
Survey Utility 126
Integrated Management Log 126

Server Specific Troubleshooting 129

Minimum Hardware Configuration 129
Server Error Messages 130
When the Server Does Not Start 130

Diagnostic Steps 132
Is the System Power LED Amber? 134
Is the System Power LED Green? 135
Is the External Health LED Green? 135
Is the Internal Health LED Green? 136
Is the Monitor Displaying Information? 137
Problems After Initial Boot 137
System Cannot Load SmartStart 138
SmartStart Fails During Installation 138
SmartStart Cannot Load Operating System 139
ROMPaq Disaster Recovery 139
Other Information Resources 140

Battery Replacement 141

Regulatory Compliance Notices 143

Regulatory Compliance Identification Numbers 143
Federal Communications Commission Notice 144
FCC Rating Label 144
Class A Equipment 144
Class B Equipment 145
Declaration of Conformity for Products Marked with the FCC Logo, United States Only 145
Modifications 146
Cables 146
Mouse Compliance Statement 146
Canadian Notice (Avis Canadien) 146
European Union Notice 147
Japanese Notice 148
BSMI Notice 148
Laser Device Notices 148
Laser Safety Warnings 149
Compliance with CDRH Regulations 149
Compliance with International Regulations 149
Laser Product Label 149
Laser Information 150
Battery Replacement Notice 150

Electrostatic Discharge 151

Preventing Electrostatic Discharge 151
Grounding Methods to Prevent Electrostatic Discharge 152

Server Specifications 153

Server Specifications 153
Environmental Specifications 154

Technical Support 155

Related Documents 155
HP Contact Information 155
Before You Contact HP 155

Acronyms and Abbreviations 157

Index 161

Server Component Identification

In This Section

Server Features 9
Front Panel Components 10
Front Panel LEDs and Buttons 11
Rear Panel Components 13
Rear Panel LEDs and Buttons 15
System Board Components 17
System Board LEDs 20
System LEDs and Internal Health LED Combinations 22
SCSI Backplane Components 24
SCSI Backplane LEDs 25
Hot-Plug SCSI Hard Drive LEDs 26
Hot-Plug SCSI Hard Drive LED Combinations 28
Internal PCI Hot Plug LEDs and Button 29
PCI Hot Plug LED Status Combinations 30
PCI Riser Cage LED 31
Remote Management Connector 31
Identifying Hot-Plug Fans 32
Hot-Plug Fan LED 33
Power Converter Module LED 34
Battery-Backed Write Cache Enabler LEDs 34
Battery-Backed Write Cache Enabler LED Statuses 35

Server Features

The HP ProLiant DL380 Generation 3 server combines the latest Intel Xeon processors with Hyper-Threading technology, PCI-X expansion slots, PCI Hot Plug, Integrated Lights-Out (iLO), Online Spare Memory support, embedded Smart Array 5i Plus Controller with optional transportable battery-backed write cache, simplex/duplex SCSI backplane, dual integrated Gigabit NICs, optional hot-plug redundant power and cooling, and rapid deploy rails for HP, Compaq branded, telco, and third-party racks.

For more information on the server, refer to the Documentation CD or the QuickSpecs on the HP website (http://h18000.www1.hp.com/products/servers/proliantdl380/).

Front Panel Components

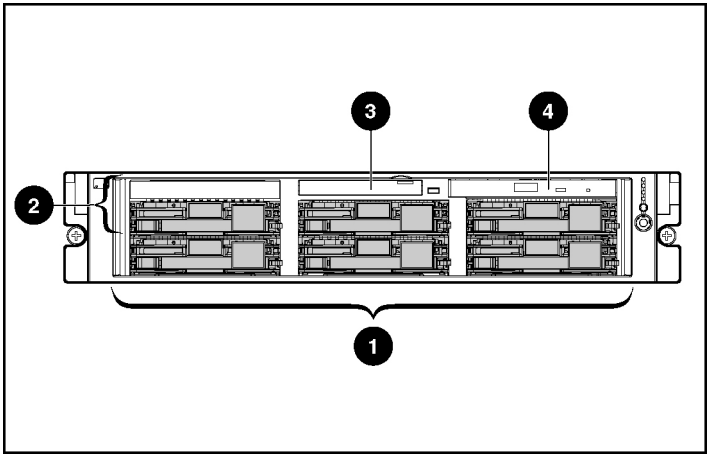

Item	Description
1	Hard drive bays
2	Bay for tape drive or hard drive and tape drive blank
3	Diskette drive
4	CD-ROM drive

Front Panel LEDs and Buttons

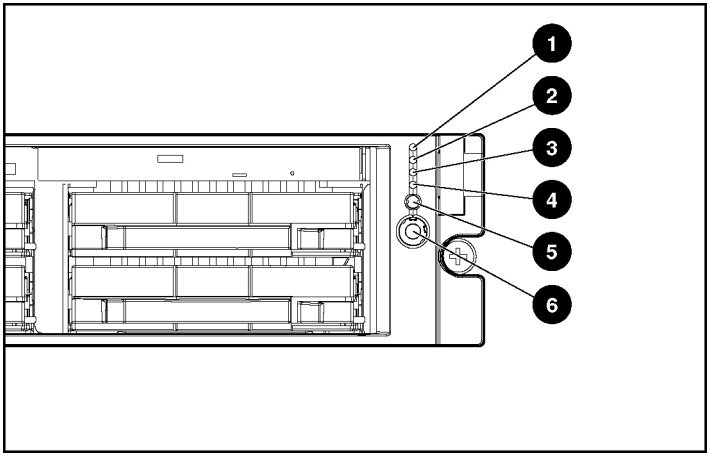

Item	Description	Status
1	Internal health LED	Green = Normal Amber = System degraded. Refer to system board LEDs to identify component in degraded state. Red = System critical. Refer to system board LEDs to identify component in critical state.
2	External health LED (power supply)	Green = Normal Amber = Power redundancy failure Red = Critical power supply failure
3	NIC 1 link/activity LED	Green = Network link Flashing = Network link and activity Off = No link to network. If power is off, view the rear panel RJ-45 LEDs for status.
4	NIC 2 link/activity LED	Green = Network link Flashing = Network link and activity Off = No link to network. If power is off, view the rear panel RJ-45 LEDs for status.
5	UID LED button	Blue = Activated Flashing = System remotely managed Off = Deactivated
6	Power On/Standby button/system power LED	Green = System on Amber = System shut down, but power still applied Off = Power cord not attached or power supply failure

Rear Panel Components

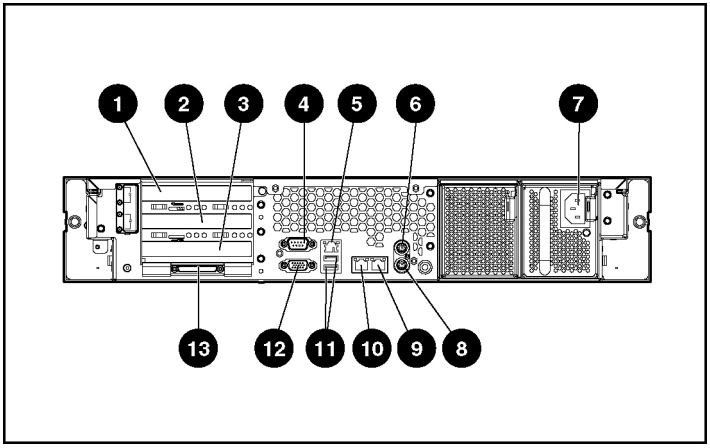

Item	Description	Connector Color
1	Hot-plug PCI-X expansion slot 3 (bus 6) 64-bit/100-MHz 3.3V	N/A
2	Hot-plug PCI-X expansion slot 2 (bus 6) 64-bit/100-MHz 3.3V	N/A
3	Non-hot-plug PCI-X expansion slot 1 (bus 3) 64-bit/133-MHz 3.3V	N/A
4	Serial connector	Teal
5	iLO connector	N/A
6	Mouse connector	Green
7	Power cord connector	N/A
8	Keyboard connector	Purple
9	NIC 1 connector	N/A
10	NIC 2 connector	N/A
11	USB connectors	Black
12	Video connector	Blue
13	VHDCI SCSI connector (port 1)	N/A

Rear Panel LEDs and Buttons

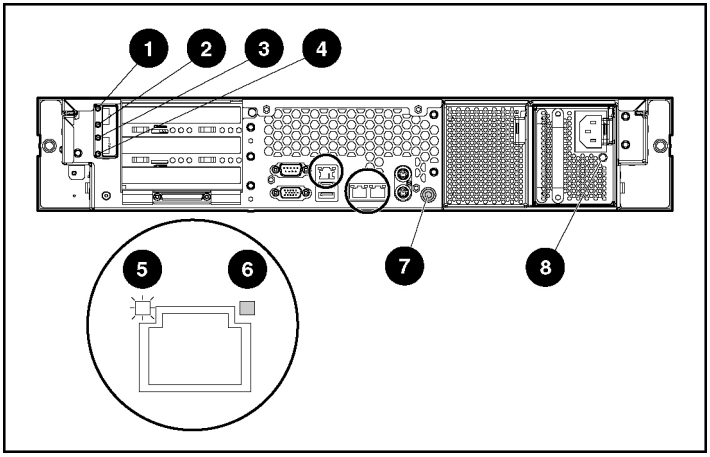

Item	Description	LED Color	Status
1	PCI Hot Plug fault LED (slot 3)	Amber	On = Expansion board failed Off = Normal
2	PCI Hot Plug power LED (slot 3)	Green	On = Power is applied to the slot Flashing = Power is cycling Off = Power is not applied to the slot
3	PCI Hot Plug fault LED (slot 2)	Amber	On = Expansion board failed Off = Normal
4	PCI Hot Plug power LED (slot 2)	Green	On = Power is applied to the slot Flashing = Power is cycling Off = Power is not applied to the slot
5	RJ-45 link LED	Green	On = Linked to network Off = Not linked to network
6	RJ-45 activity LED	Green	On or flashing = Network activity Off = No network activity
7	UID LED button	Blue	On = Activated Flashing = System remotely managed Off = Deactivated
8	Power supply LED	Green	On = Power turned on and power supply functioning properly Off = One or more of the following conditions exists: • AC power unavailable • Power supply failed • Power supply in standby mode • Power supply exceeded current limit

System Board Components

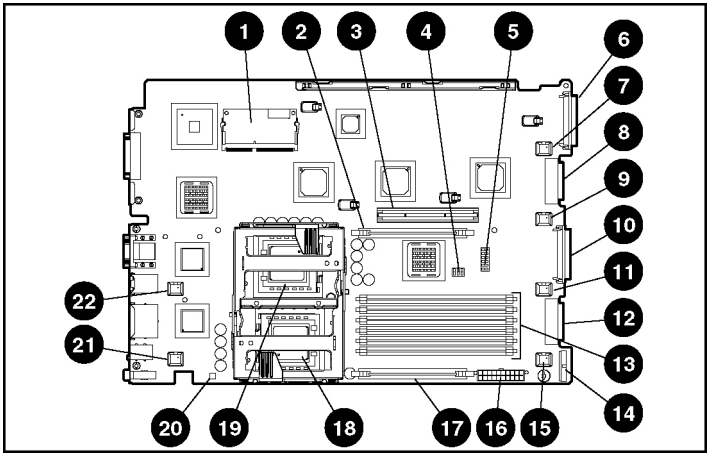

Item	Description	Item	Description
1	Smart Array 5i Plus Memory Module	12	Diskette drive system connector
2	PPM 2 slot	13	DIMM slots (1-6)
3	PCI riser cage connector	14	Power supply signal connector
4	Chassis ID switch	15	Fan 6 connector
5	System maintenance switch	16	System power connector
6	SCSI connector (port 2)	17	PPM 1 slot
7	Fan 3 connector	18	Processor 1 socket
8	CD-ROM drive system connector	19	Processor 2 socket
9	Fan 4 connector	20	NMI switch
10	SCSI connector (port 1)	21	Fan 2 connector
11	Fan 5 connector	22	Fan 1 connector

System Maintenance Switch

Position	Default	Function
S1	Off	Off = iLO security is enabled. On = iLO security is disabled.
S2	Off	Off = System configuration can be changed. On = System configuration is locked.
S3	Off	Reserved
S4	Off	Off = Booting from diskette is controlled by RBSU. On = Booting from diskette is enabled and RBSU is overridden.
S5	Off	Off = Power-on password is enabled. On = Power-on password is disabled.
S6	Off	Off = No function On = Clear NVRAM.*
* If you clear NVRAM, you must re-enter the server serial number through RBSU ("Re-Entering the Server Serial Number" on page 118).		

NMI Switch

The NMI switch allows administrators to perform a memory dump before performing a hard reset. Crash dump analysis is an essential part of eliminating reliability problems, such as hangs or crashes in operating systems, device drivers, and applications. Many crashes freeze a system, requiring you to do a hard reset. Resetting the system erases any information that would support root cause analysis.

Systems running Microsoft Windows operating systems experience a blue screen trap when the operating system crashes. When this happens, Microsoft recommends that system administrators perform an NMI event by pressing a dump switch. The NMI event enables a hung system to become responsive again.

Chassis ID Switch

The chassis ID switch on the system board is reserved for use by authorized technicians only. Do not modify the switch setting.

DIMM Slots

DIMM slots are numbered sequentially (1 through 6) and the paired banks are identified by the letters A, B, and C.

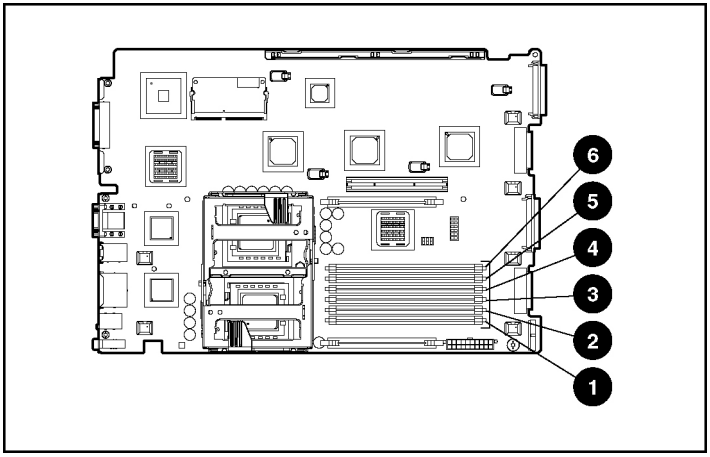

Item	Description
1	DIMM slot 1A
2	DIMM slot 2A
3	DIMM slot 3B
4	DIMM slot 4B
5	DIMM slot 5C
6	DIMM slot 6C

System Board LEDs

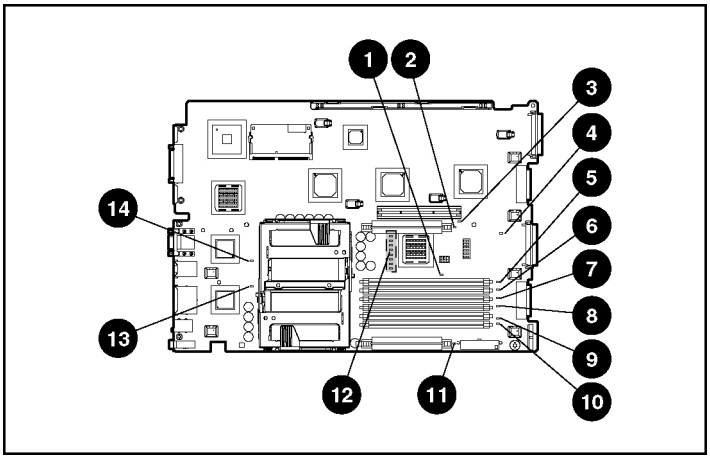

Item	LED Description	Status
1	Online spare memory	Amber = Failover, online spare memory in use Green = Enabled, but not in use Off = Disabled
2	PPM 2 failure	Amber = PPM failed Off = Normal
3	Riser interlock	Amber = PCI riser cage not seated Off = PCI riser cage is seated
4	Overtemperature	Amber = Cautionary or critical temperature level detected Off = Temperature OK
5	DIMM 6C failure	Amber = Memory failed Off = Normal
6	DIMM 5C failure	Amber = Memory failed Off = Normal
7	DIMM 4B failure	Amber = Memory failed Off = Normal
8	DIMM 3B failure	Amber = Memory failed Off = Normal
9	DIMM 2A failure	Amber = Memory failed Off = Normal
10	DIMM 1A failure	Amber = Memory failed Off = Normal
11	PPM 1 failure	Amber = PPM failed Off = Normal
12	iLO diagnostic LEDs	Refer to the *HP Integrated Lights-Out User Guide* on the Documentation CD.
13	Processor 1 failure	Amber = Processor failed Off = Normal

Item	LED Description	Status
14	Processor 2 failure	Amber = Processor failed Off = Normal

System LEDs and Internal Health LED Combinations

When the internal health LED on the front panel illuminates either amber or red, the server is experiencing a health event. Combinations of illuminated system LEDs and the internal health LED indicate system status.

The front panel health LEDs indicate only the current hardware status. In some situations, Insight Manager 7 may report server status differently than the health LEDs because the software tracks more system attributes.

System LED and Color	Internal Health LED Color	Status
Processor failure, socket *X* (Amber)	Red	One or more of the following conditions may exist: • Processor in socket *X* has failed. • Processor in socket *X* failed over to the offline spare. • Processor *X* is not installed in the socket. • Processor *X* is unsupported. • ROM detects a failed processor during POST.
	Amber	Processor in socket *X* is in a pre-failure condition.
Processor failure, both sockets (Amber)	Red	Processor types are mismatched.
PPM failure, slot *X* (Amber)	Red	• PPM in slot *X* has failed. • PPM is not installed in slot *X*, but the corresponding processor is installed.
DIMM failure, slot *X* (Amber)	Red	• DIMM in slot *X* has failed. • DIMM in slot *X* is an unsupported type, and no valid memory exists in another bank.
	Amber	• DIMM in slot *X* has reached single-bit correctable error threshold. • DIMM in slot *X* is in a pre-failure condition. • DIMM in slot *X* is an unsupported type, but valid memory exists in another bank.
DIMM failure, all slots in one bank (Amber)	Red	No valid or usable memory is installed in the system.
Overtemperature (Amber)	Red	• The Health Driver has detected a cautionary temperature level. • The server has detected a hardware critical temperature level.
Riser interlock (Amber)	Red	PCI riser cage is not seated.
Online spare memory (Amber)	Amber	Bank *X* failed over to the online spare memory bank.
Power converter module (Amber)	Red	Power converter module has failed.

System LED and Color	Internal Health LED Color	Status
Fan (Amber)	Amber	Redundant fan has failed.
	Red	The minimum fan requirements are not being met. One or more fans have failed or are missing.
SCSI configuration error (Amber)	Red	SCSI cabling or terminator configuration is incorrect for SCSI backplane.

SCSI Backplane Components

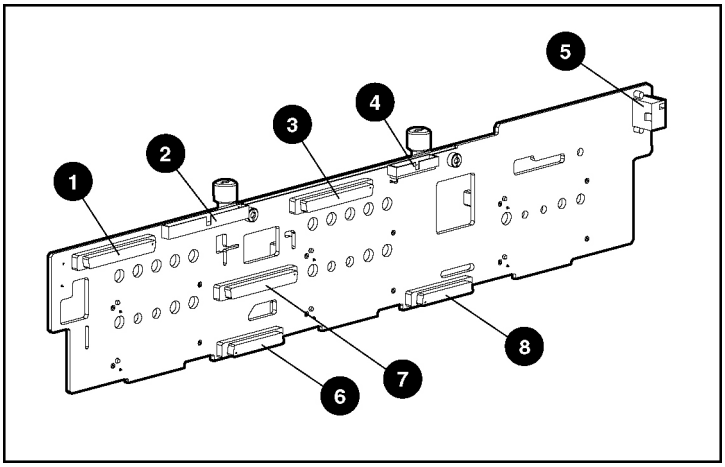

Item	Description
1	SCSI connector (port 2)
2	CD-ROM drive connector
3	SCSI connector (port 1)
4	Diskette drive connector
5	Power connector
6	CD-ROM drive system connector
7	SCSI connector (used with a jumper or terminator board)
8	Diskette drive system connector

SCSI Backplane LEDs

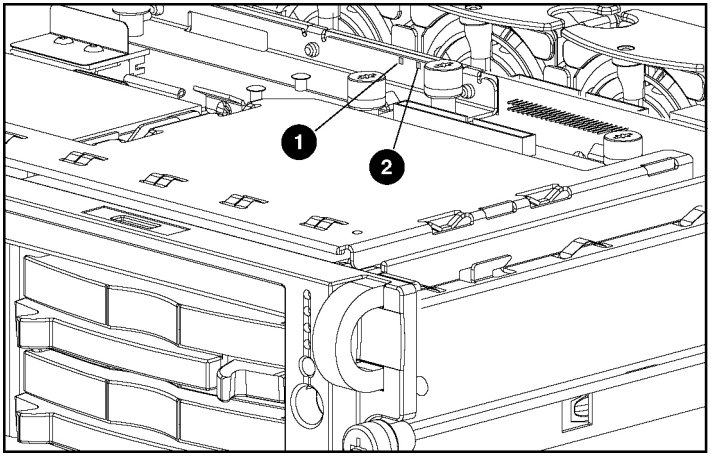

Item	LED Description	Status
1	SCSI configuration	On = Simplex Off = Duplex
2	SCSI configuration error	On = SCSI cabling or terminator configuration is incorrect Off = SCSI cabling or terminator configuration is correct

Hot-Plug SCSI Hard Drive LEDs

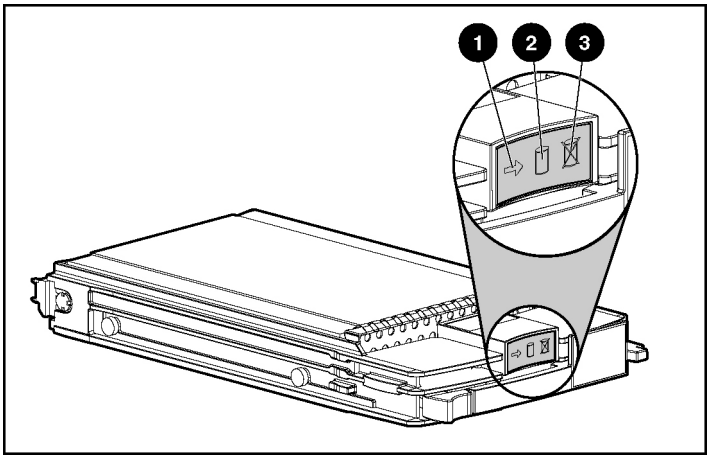

Item	LED Description	Status
1	Activity status	On = Drive activity Flashing = High activity on the drive or drive is being configured as part of an array. Off = No drive activity
2	Online status	On = Drive is part of an array and is currently working. Flashing = Drive is actively online. Off = Drive is offline.
3	Fault status	On = Drive failure Flashing = Fault-process activity Off = No fault-process activity

Hot-Plug SCSI Hard Drive LED Combinations

Activity LED (1)	Online LED (2)	Fault LED (3)	Interpretation
On, off, or flashing	On or off	Flashing	A predictive failure alert has been received for this drive. Replace the drive as soon as possible.
On, off, or flashing	On	Off	The drive is online and is configured as part of an array. If the array is configured for fault tolerance and all other drives in the array are online, and a predictive failure alert is received or a drive capacity upgrade is in progress, you may replace the drive online.
On or flashing	Flashing	Off	**Do not remove the drive. Removing a drive may terminate the current operation and cause data loss.** The drive is rebuilding or undergoing capacity expansion.
On	Off	Off	**Do not remove the drive.** The drive is being accessed, but (1) it is not configured as part of an array; (2) it is a replacement drive and rebuild has not yet started; or (3) it is spinning up during the POST sequence.
Flashing	Flashing	Flashing	**Do not remove the drive. Removing a drive may cause data loss in non-fault-tolerant configurations.** Either (1) the drive is part of an array being selected by an array configuration utility; (2) Drive Identification has been selected in Insight Manager; or (3) drive firmware is being updated.
Off	Off	On	The drive has failed and been placed offline. You may replace the drive.
Off	Off	Off	Either (1) the drive is not configured as part of an array; (2) the drive is configured as part of an array, but it is a replacement drive that is not being accessed or being rebuilt yet; or (3) the drive is configured as an online spare. If the drive is connected to an array controller, you may replace the drive online.

Internal PCI Hot Plug LEDs and Button

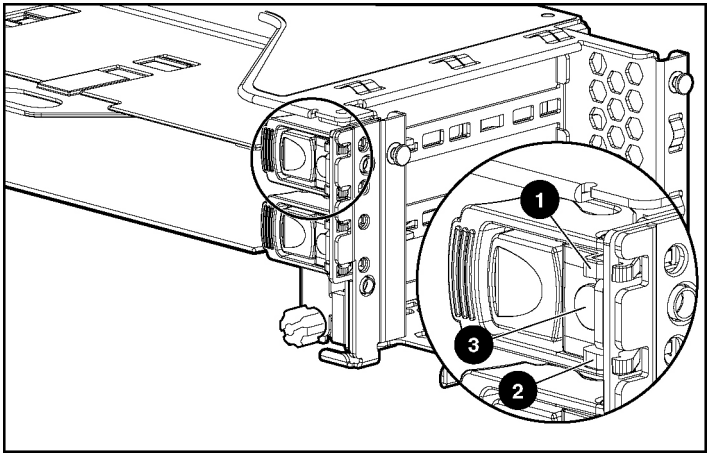

Item	Description	Status
1	Fault LED (Amber)	On = Expansion board failed. Off = Normal
2	Power LED (Green)	On = Power is applied to the slot. Flashing = Power is cycling. Off = Power is not applied to the slot.
3	PCI Hot Plug button	N/A

PCI Hot Plug LED Status Combinations

Power LED (Green)	Fault LED (Amber)	OK to open?	Slot Status
On	Off	No	The power to the slot is on and the slot is functioning normally. **Do NOT open the slot release lever**.
On	On	No	The power to the slot is on, but the slot needs attention for a possible problem with the slot, board, or driver. **DO NOT open the slot release lever.** Examine the logs and Insight Manager 7. If the expansion board is faulty, remove or replace the board.
Flashing	On or off	No	The power to the slot is being turned off or on, which may take several seconds. **DO NOT open the slot release lever.** To cancel the operation, press the PCI Hot Plug button.
Off	On	Yes	The power to the slot is off, but the slot needs attention for a possible problem with the slot, board, or driver.
Off	Off	Yes	The power to the slot is off.

PCI Riser Cage LED

CAUTION: To prevent damage to the server or expansion boards, power down the server and remove all AC power cords before removing or installing the PCI riser cage.

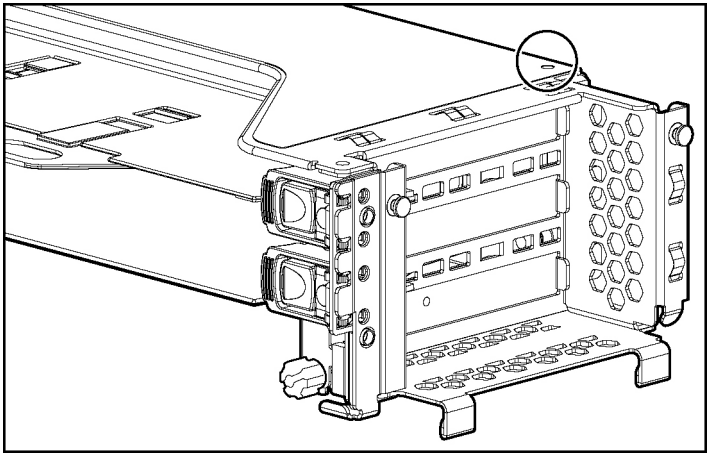

Status
On = AC power connected
Off = AC power disconnected

Remote Management Connector

The 30-pin remote management connector, located on the PCI riser cage, is used to cable the Remote Insight Lights-Out Edition II option. For more information, refer to "RILOE II Cabling (on page 108)" or the *Remote Insight Lights-Out Edition II User Guide* on the Documentation CD.

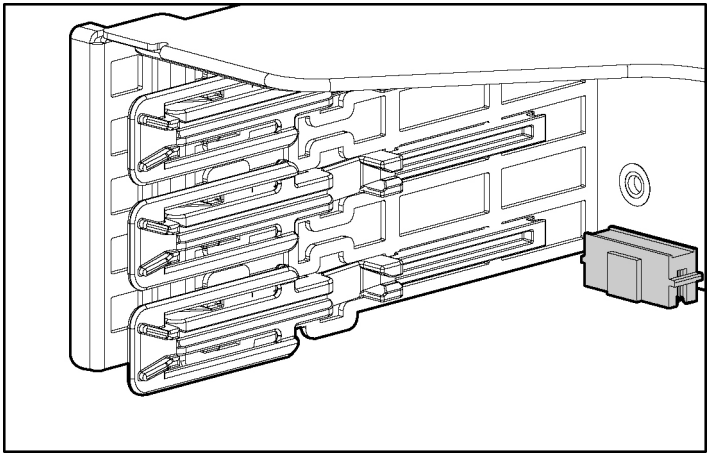

Identifying Hot-Plug Fans

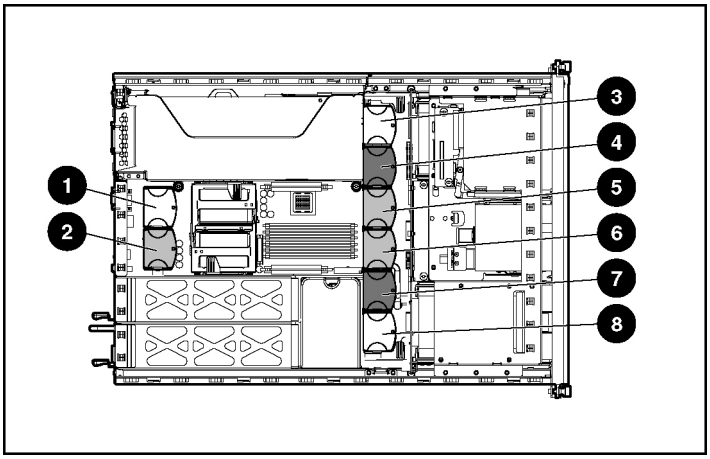

Item	Description	Zone	Configuration
1	Fan 1	Processor	Redundant
2	Fan 2	Processor	Primary
3	Fan 3	I/O	Redundant
4	Fan 4	I/O and processor	Primary (shared)
5	Fan 5	Processor	Primary
6	Fan 6	Processor	Primary
7	Fan 7	Power supply and processor	Primary (shared)
8	Fan 8	Power supply	Redundant

Hot-Plug Fan LED

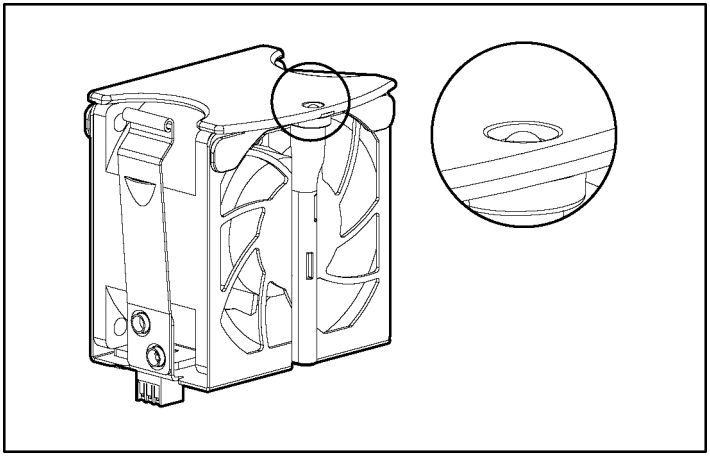

Status
Green = Operating normally
Amber = Failed
Off = No power

Power Converter Module LED

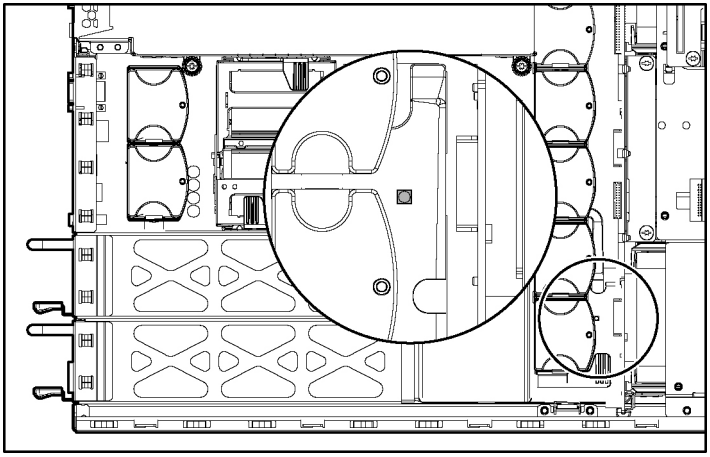

Status
Amber = Failed
Off = Operating normally

Battery-Backed Write Cache Enabler LEDs

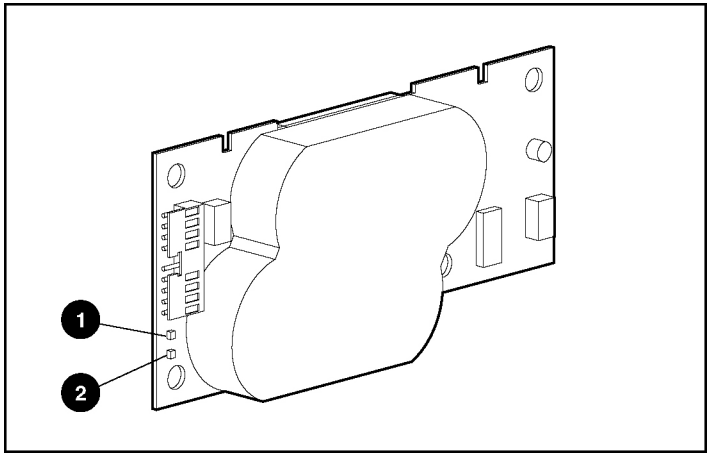

Item	LED Color
1	Amber
2	Green

For LED status information, refer to "Battery-Backed Write Cache Enabler LED Statuses (on page 35)."

Battery-Backed Write Cache Enabler LED Statuses

Server Status	LED Status	Battery Module Status
Server is on and has normal run time	Green = On	Fast charging
	Green = Off	Trickle charging
	Amber = On	A short exists in the connection of one or more of the four button cells within the battery module
	Amber = Blinking	An open exists in the circuit between the positive and negative terminals of the battery module
	Amber = Off	Normal
Server is on and is in the first 30 seconds after power up	Green = On Amber = On	Temporary lock-out state; data was lost due to cable being detached
Server is off and is in data retention mode	Amber = Blinking every 15 seconds	User data held in write cache is being backed up

Server Operations

In This Section

Powering Up the Server....37
Powering Down the Server....37
Extending the Server from the Rack....38
Removing the Access Panel....40
Installing the Access Panel....40
Removing the PCI Riser Cage....40
Installing the PCI Riser Cage....42

Powering Up the Server

To power up the server, press the Power On/Standby button.

Powering Down the Server

WARNING: To reduce the risk of personal injury, electric shock, or damage to the equipment, remove the power cord to remove power from the server. The front panel Power On/Standby button does not completely shut off system power. Portions of the power supply and some internal circuitry remain active until AC power is removed.

IMPORTANT: If installing a hot-plug device, it is not necessary to power down the server.

1. Back up the server data.
2. Shut down the operating system as directed by the operating system documentation.
3. If the server is installed in a rack, press the UID LED button on the front panel (1). Blue LEDs illuminate on the front and rear panels of the server.

4. Press the Power On/Standby button to place the server in standby mode (2). When the server activates standby power mode, the system power LED changes to amber.

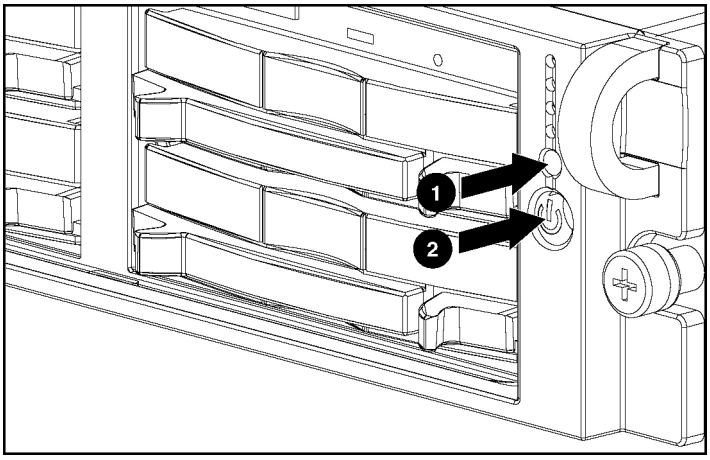

5. If the server is installed in a rack, locate the server by identifying the illuminated rear UID LED button.
6. Disconnect the power cords.

The system is now without power.

Extending the Server from the Rack

1. Loosen the thumbscrews that secure the server faceplate to the front of the rack.
2. Extend the server on the rack rails until the server rail-release latches engage.

WARNING: To reduce the risk of personal injury or equipment damage, be sure that the rack is adequately stabilized before extending a component from the rack.

WARNING: To reduce the risk of personal injury, be careful when pressing the server rail-release latches and sliding the server into the rack. The sliding rails could pinch your fingers.

3. After performing the installation or maintenance procedure, slide the server back into the rack:

   a. Press the server rail-release latches and slide the server fully into rack.

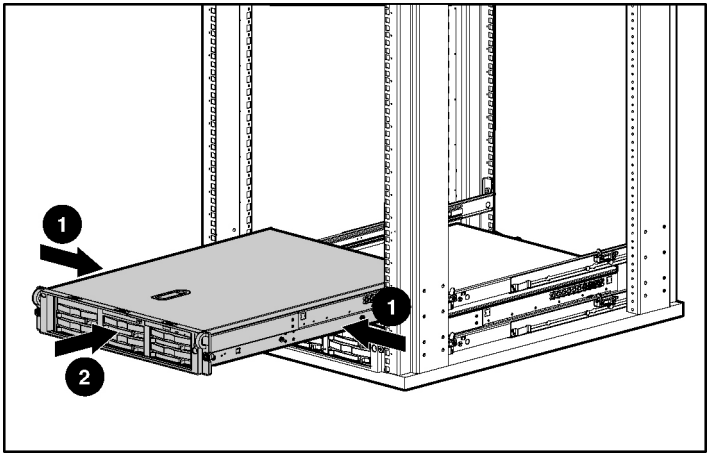

   b. Secure the server by tightening the thumbscrews.

Removing the Access Panel

WARNING: To reduce the risk of personal injury from hot surfaces, allow the drives and the internal system components to cool before touching them.

CAUTION: Do not operate the server for long periods without the access panel. Operating the server without the access panel results in improper airflow and improper cooling that can lead to thermal damage.

1. Power down the server if performing a non-hot-plug installation or maintenance procedure ("Powering Down the Server" on page 37).
2. Extend the server from the rack, if applicable ("Extending the Server from the Rack" on page 38).
3. Lift up on the hood latch handle and remove the access panel.

Installing the Access Panel

1. Place the access panel on top of the server with the hood latch open. Allow the panel to extend past the rear of the server approximately 1.25 cm (0.5 in).
2. Push down on the hood latch. The access panel slides to a closed position.

Removing the PCI Riser Cage

CAUTION: To prevent damage to the server or expansion boards, power down the server and remove all AC power cords before removing or installing the PCI riser cage.

1. Power down the server ("Powering Down the Server" on page 37).
2. Extend the server from the rack, if applicable ("Extending the Server from the Rack" on page 38).
3. Remove the access panel ("Removing the Access Panel" on page 40).

4. Disconnect any internal or external cables connected to any existing expansion boards.
5. Lift the PCI riser cage thumbscrews (1) and turn them counter-clockwise (2).
6. Remove the PCI riser cage (3).

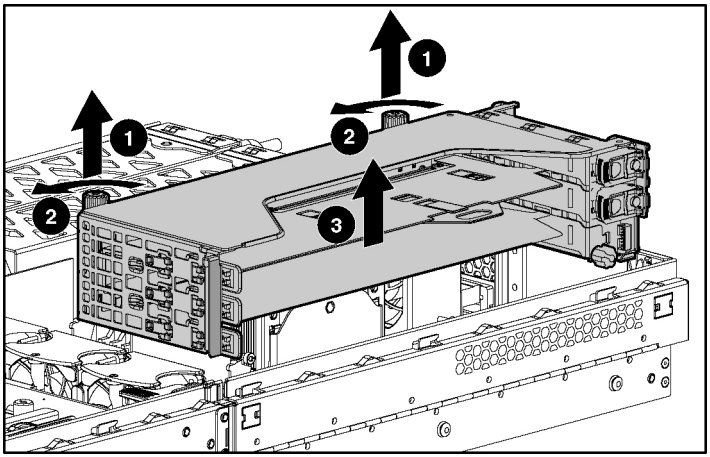

Installing the PCI Riser Cage

CAUTION: To prevent damage to the server or expansion boards, power down the server and remove all AC power cords before removing or installing the PCI riser cage.

1. Align the PCI riser cage with the chassis and slide it into place.

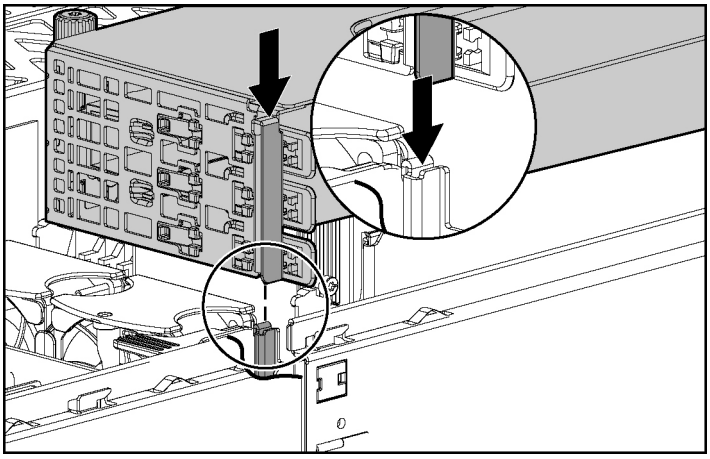

2. Tighten the thumbscrews to secure the PCI riser cage:
   a. Lift the thumbscrew knobs (1).
   b. Turn the thumbscrews clockwise while pressing down, until tightened (2).

c. Turn the thumbscrews counterclockwise to lower thumbscrew knobs (3).

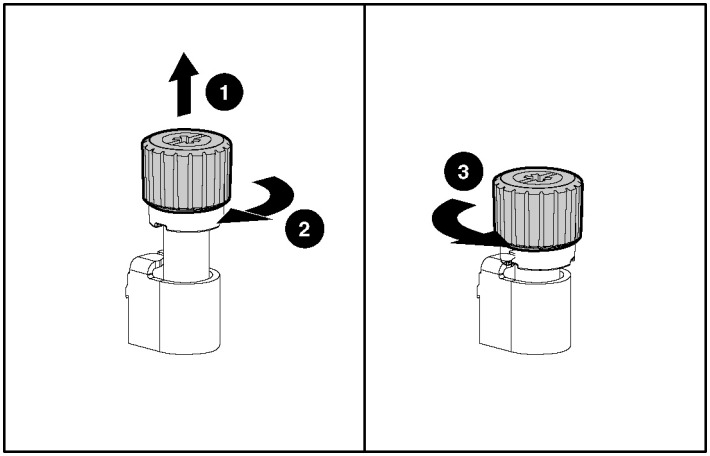

Server Setup

In This Section

Optional Installation Services....45
Rack Planning Resources....46
Optimum Environment....47
Rack Warnings....50
Identifying the Contents of the Server Shipping Carton....51
Installing Hardware Options....52
Installing the Server into the Rack....52
Powering Up and Configuring the Server....62
Installing the Operating System....63
Registering the Server....63

Optional Installation Services

You may choose to have HP install the system. The installation service can be purchased as a Care Pack packaged service or as a customized service agreement to meet your specific requirements. Some of the Care Pack services are as follows:

- Hardware installation services
- Hardware and operating system installation for ProLiant servers
- Installation and start-up services for some operating systems
- Installation and start-up services for Insight Manager

This optional hardware installation service is available in all countries where HP has a direct or indirect service presence. The service may be ordered from and provided by an authorized service reseller or, in the United States only, the service may be ordered by calling 1-800-652-6672. In the United States, HP makes all the arrangements to have the system installed by qualified guaranteed service providers. For more information, refer to the HP website (http://www.hp.com/hps).

For a list of operating systems, supported by the server, refer to the HP website (ftp://ftp.compaq.com/pub/products/servers/os-support-matrix-310.pdf).

Rack Planning Resources

The rack resource kit ships with all HP branded or Compaq branded 9000, 10000, and H9 series racks. A summary of the content of each resource follows:

- The Rack Builder Pro Configuration Tool enables you to simulate potential rack configurations based on your input and provides the following information:
  - Graphical preview of properly configured racks
  - Site planning data, including power requirements, cooling mandates, and physical specifications
  - Ordering information, including required components, part numbers, and appropriate quantities

  For more information, refer to the HP website (http://www.hp.com/products/servers/platforms).
- The Installing Rack Products video provides a visual overview of operations required for configuring a rack with rack-mountable components. It also provides the following important configuration steps:
  - Planning the site
  - Installing rack servers and rack options
  - Cabling servers in a rack
  - Coupling multiple racks
- The Rack Products Documentation CD enables you to view, search, and print documentation for HP and Compaq branded racks and rack options. It also helps you set up and optimize a rack in a manner that best fits your environment.

If you intend to deploy and configure multiple servers in a single rack, refer to the white paper on high-density deployment on the HP website (http://www.hp.com/products/servers/platforms).

Optimum Environment

When installing the server in a rack, select a location that meets the environmental standards described in this section.

Space and Airflow Requirements

To allow for servicing and adequate airflow, observe the following space and airflow requirements when deciding where to install a rack:

- Leave a minimum clearance of 63.5 cm (25 in) in front of the rack.
- Leave a minimum clearance of 76.2 cm (30 in) behind the rack.
- Leave a minimum clearance of 121.9 cm (48 in) from the back of the rack to the back of another rack or row of racks.

HP servers draw in cool air through the front door and expel warm air through the rear door. Therefore, the front and rear rack doors must be adequately ventilated to allow ambient room air to enter the cabinet, and the rear door must be adequately ventilated to allow the warm air to escape from the cabinet.

CAUTION: To prevent improper cooling and damage to the equipment, do not block the ventilation openings.

When there is vertical space in the rack not filled by a server or rack component, the gaps between the components cause changes in airflow through the rack and across the servers. Cover all gaps with blanking panels to maintain proper airflow.

CAUTION: Always use blanking panels to fill empty vertical spaces in the rack. This arrangement ensures proper airflow. Using a rack without blanking panels results in improper cooling that can lead to thermal damage.

The 9000 and 10000 Series racks provide proper server cooling from flow-through perforations in the front and rear doors that provide 64 percent open area for ventilation.

CAUTION: When using a Compaq branded 7000 Series rack, you must install the high airflow rack door insert [P/N 327281-B21 (42U) or P/N 157847-B21 (22U)] to provide proper front-to-back airflow and cooling.

CAUTION: If a third-party rack is used, observe the following additional requirements to ensure adequate airflow and to prevent damage to the equipment:

- Front and rear doors—If the 42U server rack includes closing front and rear doors, you must allow 5,350 sq cm (830 square inches) of holes evenly distributed from top to bottom to permit adequate airflow (equivalent to the required 64 percent open area for ventilation).
- Side—The clearance between the installed rack component and the side panels of the rack must be a minimum of 7 cm (2.75 inches).

Temperature Requirements

To ensure continued safe and reliable equipment operation, install or position the system in a well-ventilated, climate-controlled environment.

The maximum recommended ambient operating temperature (TMRA) for most server products is 35°C (95°F). The temperature in the room where the rack is located must not exceed 35°C (95°F).

CAUTION: To reduce the risk of damage to the equipment when installing third-party options:

- Do not permit optional equipment to impede airflow around the server or to increase the internal rack temperature beyond the maximum allowable limits.
- Do not exceed the manufacturer's TMRA.

Power Requirements

Installation of this equipment must comply with local and regional electrical regulations governing the installation of information technology equipment by licensed electricians. This equipment is designed to operate in installations covered by NFPA 70, 1999 Edition (National Electric Code) and NFPA-75, 1992 (code for Protection of Electronic Computer/Data Processing Equipment). For electrical power ratings on options, refer to the product rating label or the user documentation supplied with that option.

WARNING: To reduce the risk of personal injury, fire, or damage to the equipment, do not overload the AC supply branch circuit that provides power to the rack. Consult the electrical authority having jurisdiction over your facility's wiring and installation requirements.

CAUTION: Protect the server from power fluctuations and temporary interruptions with a regulating uninterruptible power supply (UPS). This device protects the hardware from damage caused by power surges and voltage spikes and keeps the system in operation during a power failure.

When installing more than one server, you may need to use additional power distribution devices to safely provide power to all devices. Observe the following guidelines:

- Balance the server power load between available AC supply branch circuits.
- Do not allow the overall system AC current load to exceed 80 percent of the branch circuit AC current rating.
- Do not use common power outlet strips for this equipment.
- Provide a separate electrical circuit for the server.

Electrical Grounding Requirements

The server must be grounded properly for proper operation and safety. In the United States, you must install the equipment in accordance with NFPA 70, 1999 Edition (National Electric Code), Article 250, as well as any local and regional building codes. In Canada, you must install the equipment in accordance with Canadian Standards Association, CSA C22.1, Canadian Electrical Code. In all other countries, you must install the equipment in accordance with any regional or national electrical wiring codes, such as the International Electrotechnical Commission (IEC) Code 364, parts 1 through 7. Furthermore, you must be sure that all power distribution devices used in the installation, such as branch wiring and receptacles, are listed or certified grounding-type devices.

Because of the high ground-leakage currents associated with multiple servers connected to the same power source, HP recommends the use of a power distribution unit (PDU) that is either permanently wired to the building's branch circuit or includes a nondetachable cord that is wired to an industrial-style plug. NEMA locking-style plugs or those complying with IEC 60309 are considered suitable for this purpose. Using common power outlet strips for the server is not recommended.

Rack Warnings

WARNING: To reduce the risk of personal injury or damage to the equipment, be sure that:

- **The leveling jacks are extended to the floor.**
- **The full weight of the rack rests on the leveling jacks.**
- **The stabilizing feet are attached to the rack if it is a single-rack installation.**
- **The racks are coupled together in multiple-rack installations.**
- **Only one component is extended at a time. A rack may become unstable if more than one component is extended for any reason.**

WARNING: To reduce the risk of personal injury or equipment damage when unloading a rack:

- **At least two people are needed to safely unload the rack from the pallet. An empty 42U rack can weigh as much as 115 kg (253 lb), can stand more than 2.1 m (7 ft) tall, and may become unstable when being moved on its casters.**
- **Never stand in front of the rack when it is rolling down the ramp from the pallet. Always handle the rack from both sides.**

Identifying the Contents of the Server Shipping Carton

Unpack the server shipping carton and locate the materials and documentation necessary for installing the server. All the rack-mounting hardware necessary for installing the server into the rack is included with the rack or the server.

The contents of the server shipping carton include:

- Server
- Printed setup documentation, Documentation CD, and software products
- Power cord
- Rack-mounting hardware

In addition to these supplied items, you may need:

- Application software diskettes

- Options to be installed

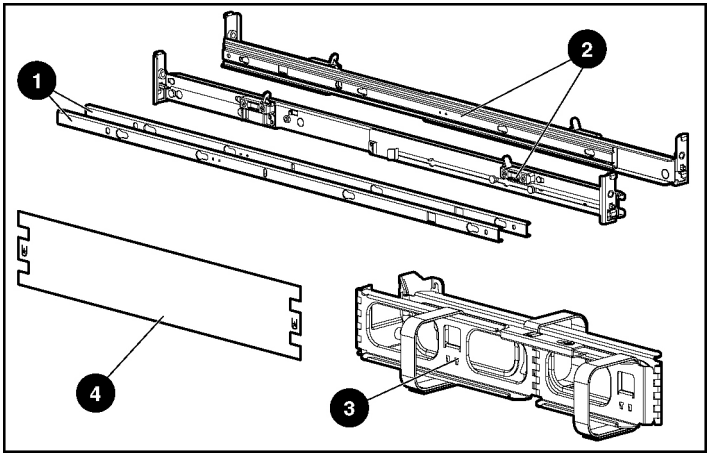

Item	Description
1	Server rails
2	Left and right standard rack rail assemblies
3	Cable management arm
4	Rack template

Installing Hardware Options

Install any hardware options before initializing the server. For options installation information, refer to the option documentation. For server-specific information, refer to "Hardware Options Installation (on page 65)."

Installing the Server into the Rack

Follow the steps in this section if you are installing the server into a rack with square holes. If you are installing the server into a rack with round holes, order the appropriate rack installation option kit, and then refer to the installation instructions that ship with the option kit for more information.

NOTE: The steps in this section work with most third-party racks with square holes. If they do not work with the rack you are using, order the option kit for racks with round holes.

If you are installing the server into a telco rack, order the appropriate option kit at the RackSolutions.com website (http://www.racksolutions.com/hp). Follow the server-specific instructions on the website to install the rack brackets. After installing the brackets, follow the steps in this section.

WARNING: When installing a server in a telco rack, be sure that the rack frame is adequately secured to the top and bottom of the building structure.

1. Mark the rack.

CAUTION: Always plan the rack installation so that the heaviest item is on the bottom of the rack. Install the heaviest item first, and continue to populate the rack from the bottom to the top.

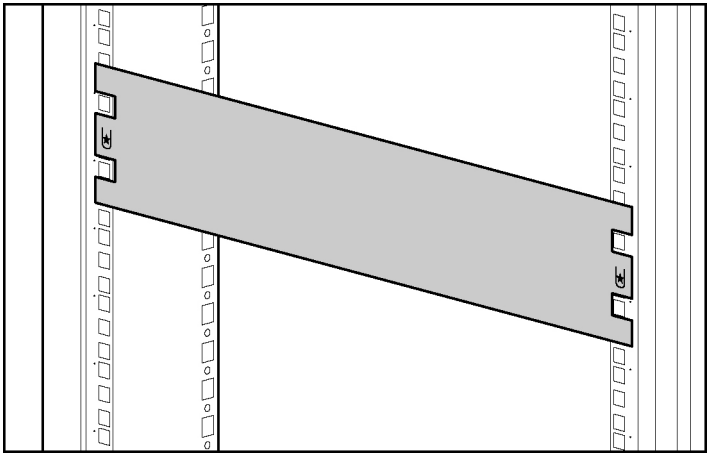

NOTE: Rack components are removed for clarity.

2. Secure each server rail to the server.

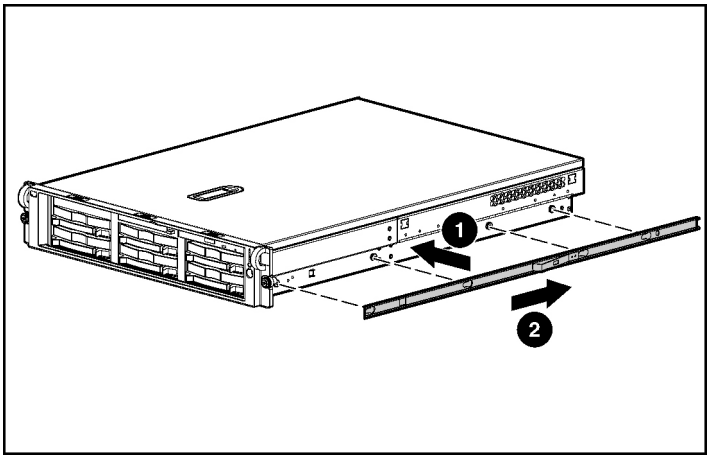

3. Secure the left and right standard rack rails to the appropriate side of the rack.

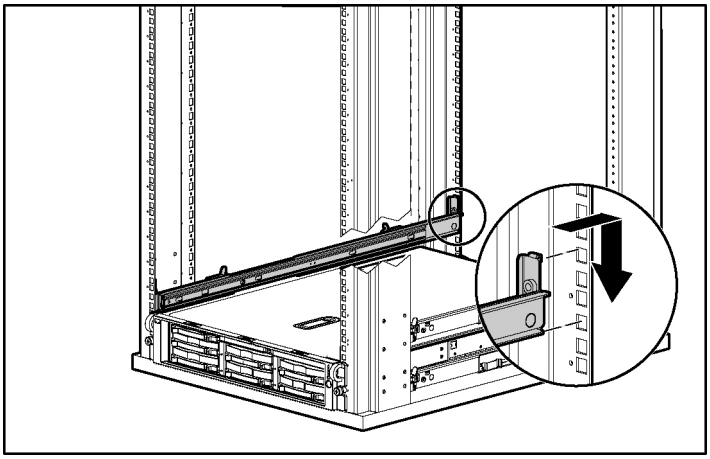

4. Extend the slides from the standard rack rails, and then slide the server rails into the slides.

WARNING: To reduce the risk of personal injury or equipment damage, be sure that the rack is adequately stabilized before sliding the server rails into the rack rails.

CAUTION: Be sure to keep the server parallel to the floor when sliding the server rails into the rack rails. Tilting the server up or down could result in damage to the rails.

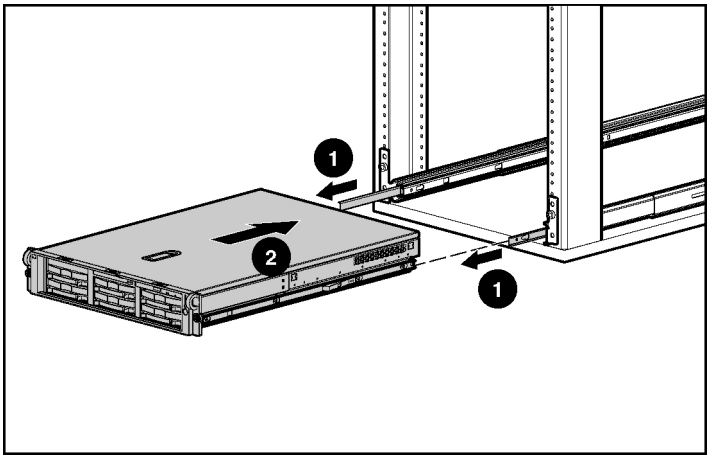

5. Press the rail-release latches and slide the server into the rack.

WARNING: To reduce the risk of personal injury, be careful when pressing the server rail-release latches and sliding the server into the rack. The sliding rails could pinch your fingers.

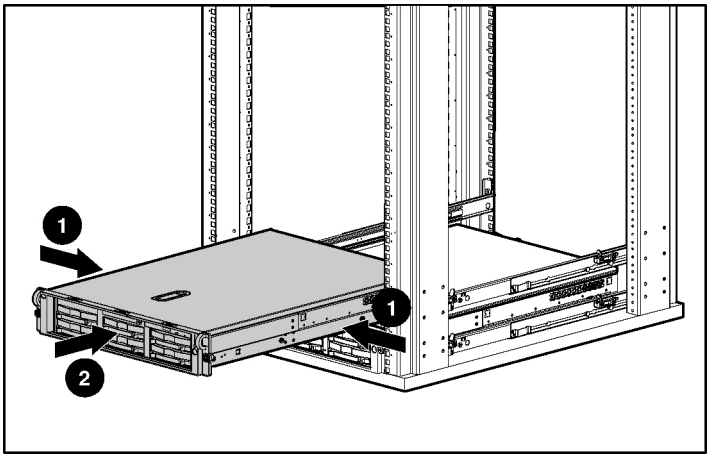

6. Secure the server to the rack.

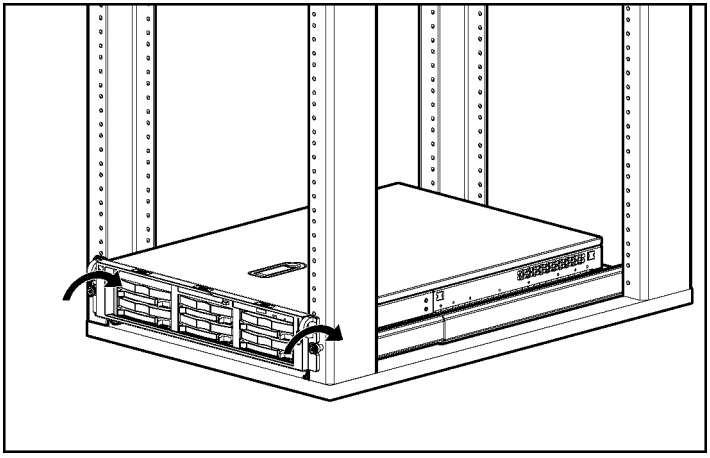

7. Secure the cable management arm bracket to the server.

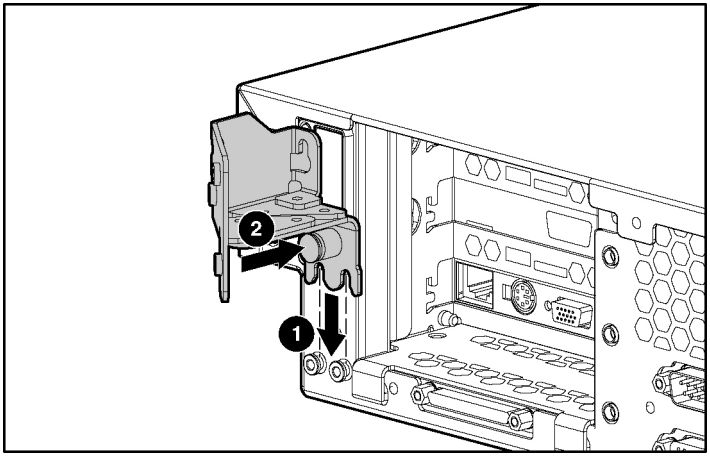

NOTE: Cable management arm is removed for clarity.

8. Secure the cable management bracket to the rail.

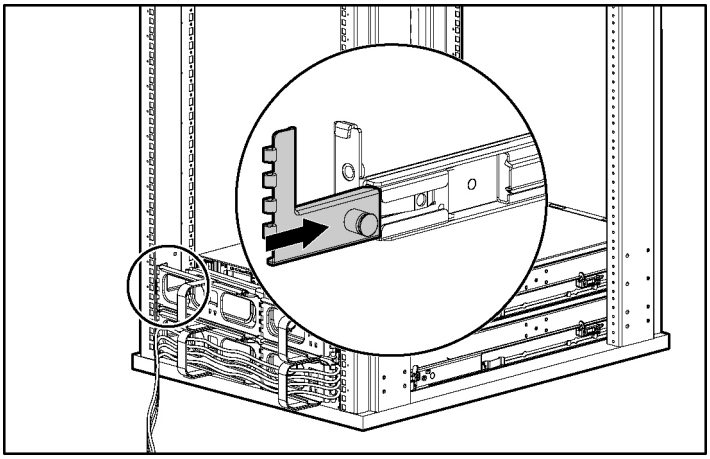

9. Connect peripheral devices to the server.

WARNING: To reduce the risk of electric shock, fire, or damage to the equipment, do not plug telephone or telecommunications connectors into RJ-45 connectors.

IMPORTANT: If the RILOE II board is installed in the server, be sure that you attach the video cable to the video connector on the rear of the RILOE II board. The standard video connector on the server rear panel is not used when the RILOE II board is installed. For more information, refer to the *HP Remote Insight Lights-Out Edition II User Guide* on the Documentation CD.

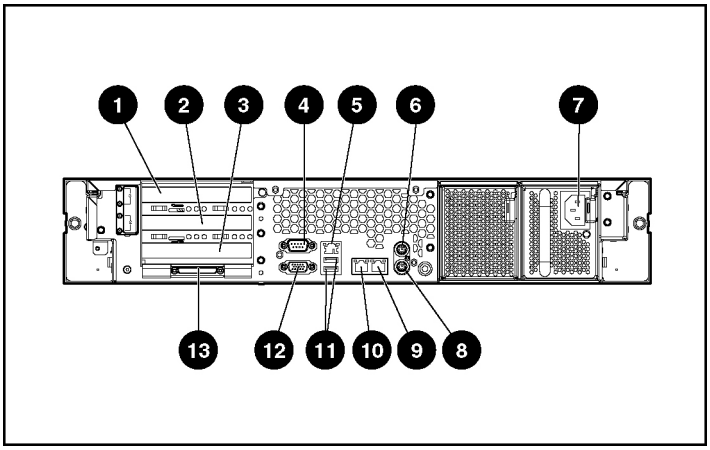

Item	Description	Connector Color
1	Hot-plug PCI-X expansion slot 3 (bus 6) 64-bit/100-MHz 3.3V	N/A
2	Hot-plug PCI-X expansion slot 2 (bus 6) 64-bit/100-MHz 3.3V	N/A
3	Non-hot-plug PCI-X expansion slot 1 (bus 3) 64-bit/133-MHz 3.3V	N/A
4	Serial connector	Teal
5	iLO connector	N/A
6	Mouse connector	Green
7	Power cord connector	N/A
8	Keyboard connector	Purple
9	NIC 1 connector	N/A
10	NIC 2 connector	N/A
11	USB connectors	Black
12	Video connector	Blue
13	VHDCI SCSI connector (port 1)	N/A

10. Connect the power cord to the back of the server.
11. If you chose not to install the cable management arm, install the power cord anchor.

a. Secure the power cord anchor to the server, and then insert the tie wrap into the groove on the power cord anchor.

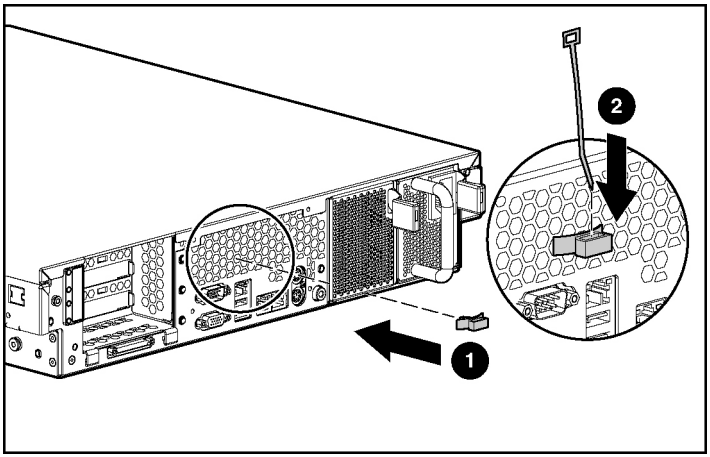

NOTE: Peripheral device cables are removed for clarity.

b. Place the power cord across the tie wrap at the following locations:

21.59 cm (8.5 inches) from the end of the redundant power supply cord

27.94 cm (11 inches) from the end of the primary power supply cord

NOTE: If using the power cord anchor, be sure to leave enough slack in the power cord so that the redundant power supply can be removed without disconnecting the power cord from the primary power supply.

c. Secure the tie wrap around the power cord to prevent accidental disengagement.

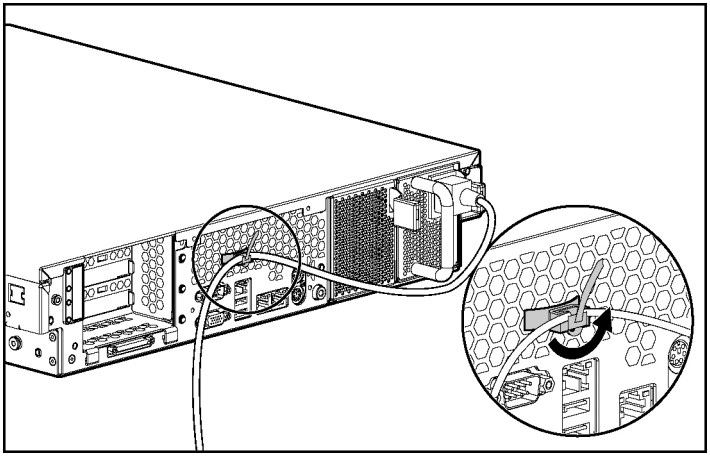

12. Secure cables to the cable management arm.

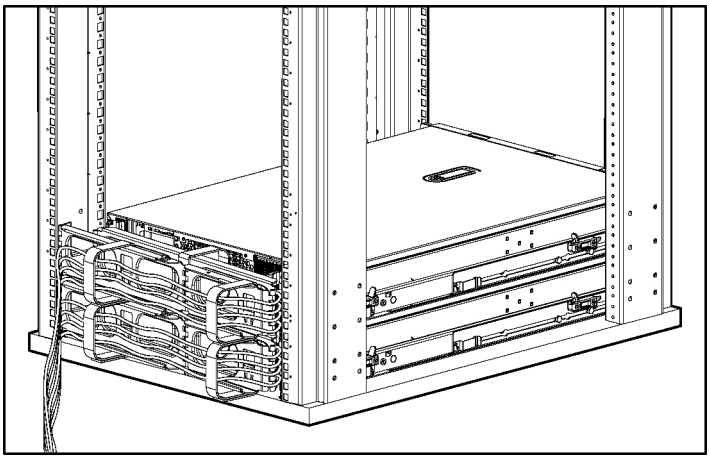

13. Connect the power cord to the AC power source.

WARNING: To reduce the risk of electric shock or damage to the equipment:

- **Do not disable the power cord grounding plug. The grounding plug is an important safety feature.**
- **Plug the power cord into a grounded (earthed) electric outlet that is easily accessible at all times.**
- **Unplug the power cord from the power supply to disconnect power to the equipment.**
- **Do not route the power cord where it can be walked on or pinched by items placed against it. Pay particular attention to the plug, electric outlet, and the point where the cord extends from the server.**

Powering Up and Configuring the Server

To power up the server, press the Power On/Standby button.

While the server boots, RBSU and the ORCA utility are automatically configured to prepare the server for operating system installation. To configure these utilities manually:

- Press the **F8** key when prompted during the array controller initialization to configure the array controller using ORCA. The array controller defaults to RAID 0 with one drive installed and RAID 1 with more than one drive installed.
- Press the **F9** key when prompted during the boot process to change the server settings, such as the settings for language and operating system, using RBSU. The system is set up by default for the English language and a Microsoft Windows 2000 installation.

For more information on the automatic configuration, refer to the *HP ROM-Based Setup Utility User Guide* located on the Documentation CD.

Installing the Operating System

To operate properly, the server must have a supported operating system. For the latest information on supported operating systems, refer to the HP website (ftp://ftp.compaq.com/pub/products/servers/os-support-matrix-310.pdf).

Two methods are available to install an operating system on the server:

- SmartStart assisted installation—Insert the SmartStart CD into the CD-ROM drive and reboot the server.
- Manual installation—Insert the operating system CD into the CD-ROM drive and reboot the server. This process may require you to obtain additional drivers from the HP website (http://www.hp.com/support).

Follow the on-screen instructions to begin the installation process.

For information on using these installation paths, refer to the SmartStart installation poster in the *ProLiant Essentials Foundation Pack*, included with the server.

Registering the Server

Register the server at the HP website (http://register.hp.com).

Hardware Options Installation

In This Section

Introduction 65
Processor Option 65
Memory Options 69
Hot-Plug SCSI Hard Drive Options 72
Hot-Plug Tape Drive Option 75
Battery-Backed Write Cache Enabler Option 77
Redundant Hot-Plug Fans 79
Redundant Hot-Plug AC Power Supply Option 84
DC Power Supply Option 87
Expansion Board Options 91

Introduction

If more than one option is being installed, read the installation instructions for all of the hardware options and identify similar steps to streamline the installation process.

WARNING: To reduce the risk of personal injury from hot surfaces, allow the drives and the internal system components to cool before touching them.

CAUTION: To prevent damage to electric components, properly ground the server before beginning any installation procedure. Improper grounding can cause electrostatic discharge.

Processor Option

The server supports single- and dual-processor operation. With two processors installed, the server supports boot functions through the processor installed in processor socket 1. However, if processor 1 fails, the system automatically boots from processor 2 and provides a processor failure message.

The server uses PPMs as DC-to-DC converters to provide the proper power to each processor. Each PPM must be installed in the slot adjacent to its processor.

CAUTION: To prevent thermal instability and damage to the server, do not separate the processor from the heatsink. The processor, heatsink, and retaining clip make up a single assembly.

CAUTION: To prevent possible server malfunction and damage to the equipment, do not mix processors of different types.

IMPORTANT: If upgrading processor speed, update the system ROM before installing the processor.

IMPORTANT: Processor socket 1 and PPM slot 1 must be populated at all times or the server will not function properly.

IMPORTANT: Always install a PPM when you install a processor. The system fails to boot if the PPM is missing.

To install a processor:

1. Power down the server ("Powering Down the Server" on page 37).
2. Extend the server from the rack, if applicable ("Extending the Server from the Rack" on page 38).
3. Remove the access panel ("Removing the Access Panel" on page 40).
4. Open the processor retaining bracket.

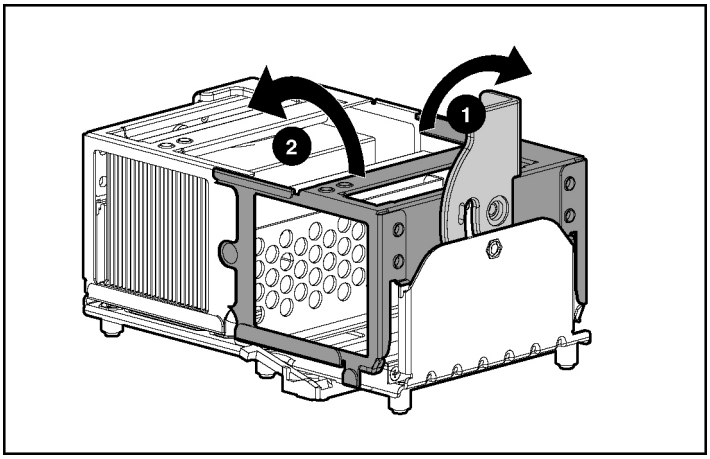

5. Release the processor locking lever.

CAUTION: Failure to open the processor locking lever completely prevents the processor from seating during installation, leading to hardware damage.

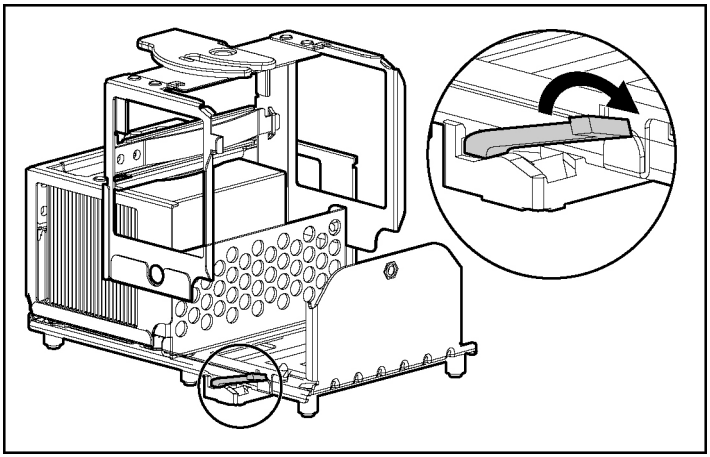

6. Install the processor.

CAUTION: To prevent possible server malfunction or damage to the equipment, be sure to completely close the processor locking lever.

IMPORTANT: Processor 2 is oriented 180 degrees from processor 1.

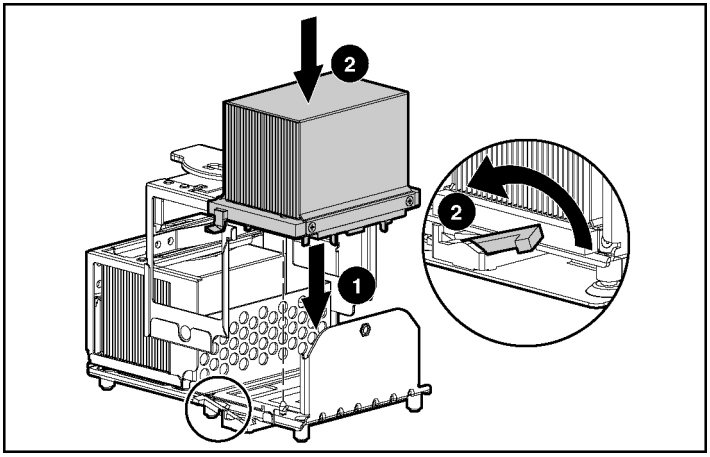

7. Close the processor retaining bracket.

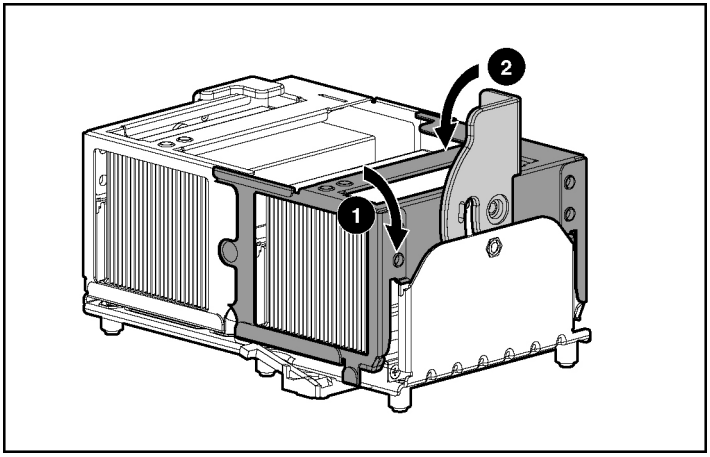

8. Open the latches on the corresponding PPM slot.

9. Install the PPM.

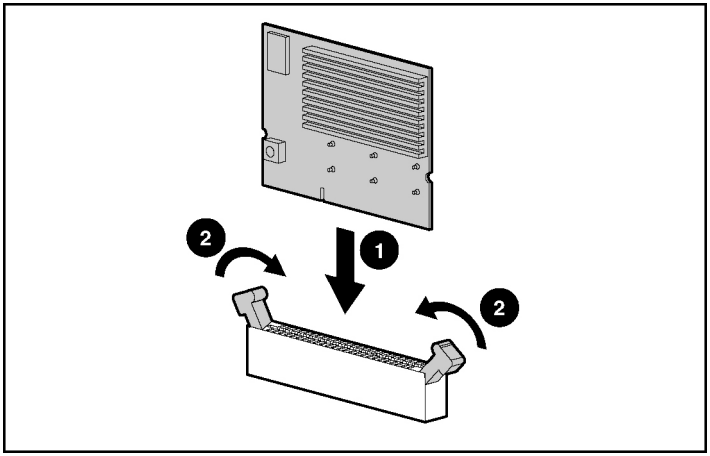

NOTE: The appearance of compatible PPMs may vary.

10. Install the access panel ("Installing the Access Panel" on page 40).

Memory Options

You can expand server memory by installing PC2100 Registered DDR SDRAM DIMMs. The system supports up to six DIMMs.

NOTE: The **Advanced Memory Protection** option in RBSU provides additional memory protection beyond Advanced ECC. By default, the server is set to **Advanced ECC Support**. Refer to "ROM-Based Setup Utility (on page 111)," on the Documentation CD, for more information.

The server supports two types of memory configurations:

- Standard memory configuration for maximum performance
  - 2.4-GHz and 2.8-GHz models—up to 6 GB active memory (six 1-GB memory modules)
  - 3.06-GHz or greater models—up to 12 GB of active memory (six 2-GB memory modules)
- Online spare memory configuration for maximum availability

- 2.4-GHz and 2.8 GHz models— up to 4 GB active memory and 2 GB online spare memory
- 3.06-GHz or greater models—up to 8 GB of active memory and 4 GB of online spare memory

Refer to "DIMM Slots (on page 19)" for DIMM slot locations and bank assignments.

Online Spare Memory Configuration

In the online spare configuration, the ROM automatically configures the last populated bank as the spare memory. If only banks A and B are populated, bank B is the spare bank. If banks A, B, and C are populated, bank C is the spare bank. If DIMMs in a non-spare bank exceed the limit for the single-bit correctable errors threshold as defined by the Pre-Failure Warranty, the system copies the memory contents of the failing bank to the spare bank. The system then deactivates the failing bank and automatically switches over to the spare bank.

For online spare memory support, you must observe the following guidelines:

- The ROM must be up to date.
- DIMMs installed in a spare bank must be of equal or greater capacity than the DIMMs installed in other banks.

  For example, if bank A is populated with two 256-MB DIMMs and bank B is populated with two 512-MB DIMMs, bank C must be populated with two 512-MB or greater DIMMs in order for online spare memory support to function properly.

After installing DIMMs, use RBSU to configure the system for online spare memory support ("Configuring Online Spare Memory" on page 118).

DIMM Installation Guidelines

You must observe the following guidelines when installing additional memory:

- Always install memory in pairs of two identical DIMMs.

- Install only PC2100 Registered DDR SDRAM DIMMs, 2.5 volts, 72 bits wide, and ECC.
- Install DIMMs with the same speed.
- Install DIMMs into both slots within a single bank. Install DIMMs in order.
- Upgrade memory by installing DIMM pairs into banks in sequential bank order, starting with bank B.

For online spare memory support, you must also observe additional guidelines ("Online Spare Memory Configuration" on page 70).

Installing DIMMs

1. Power down the server ("Powering Down the Server" on page 37).
2. Extend the server from the rack, if applicable ("Extending the Server from the Rack" on page 38).
3. Remove the access panel ("Removing the Access Panel" on page 40).
4. Open the DIMM slot latches.
5. Install the DIMM.

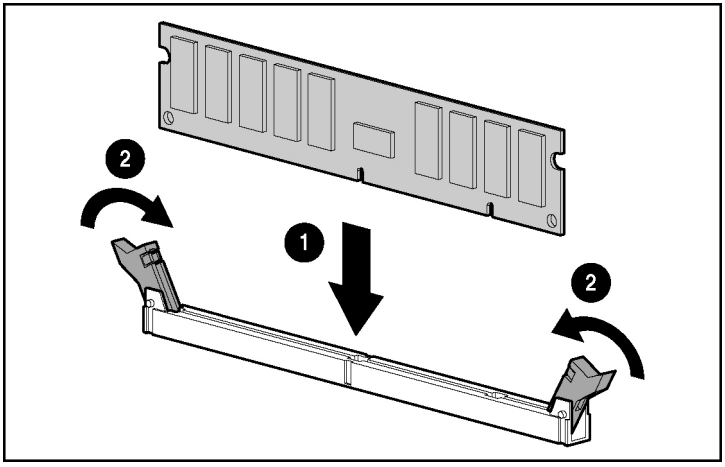

6. Install the access panel ("Installing the Access Panel" on page 40).

7. If you are installing DIMMs in an online spare configuration, use RBSU to configure this feature ("Configuring Online Spare Memory" on page 118).

Hot-Plug SCSI Hard Drive Options

When adding SCSI hard drives to the server, observe the following general guidelines:

- A maximum of 14 SCSI devices per channel can be added.
- Each SCSI drive must have a unique ID. The system automatically sets all SCSI IDs.
- The SCSI ID for each hot-plug hard drive is set automatically to the next sequential ID number in a series beginning with ID0.
- If only one SCSI hard drive is used, install it in the bay with the lowest number.
- Hot-plug hard drives must be either Wide Ultra2 or Ultra3 SCSI types. Mixing these types with other drive standards degrades the overall performance of the drive subsystem.
- Drives must be the same capacity to provide the greatest storage space efficiency when drives are grouped together into the same drive array.

SCSI IDs

The server supports single- or dual-channel hard drive configurations. The single-channel configuration (simplex) supports up to six hard drives on one channel. The dual-channel configuration (duplex) supports two hard drives on one channel (SCSI IDs 0 and 1) and up to four hard drives on the other channel (SCSI IDs 2 through 5).

The SCSI IDs for both simplex and duplex configurations are illustrated. Always populate hard drive bays starting with the lowest SCSI ID.

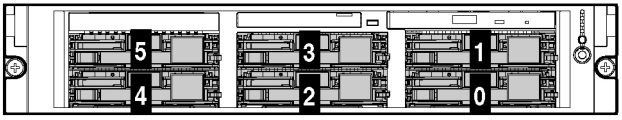

Removing a Hard Drive Blank

CAUTION: To prevent improper cooling and thermal damage, do not operate the server unless all bays are populated with either a component or a blank.

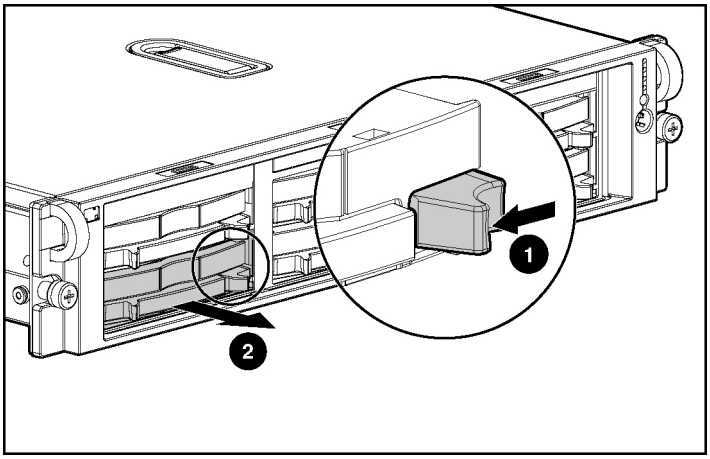

Removing a Hot-Plug SCSI Hard Drive

CAUTION: To prevent improper cooling and thermal damage, do not operate the server unless all bays are populated with either a component or a blank.

1. Determine the status of the hard drive from the hot-plug hard drive LEDs ("Hot-Plug SCSI Hard Drive LEDs" on page 26).
2. Back up all server data on the hard drive.
3. Remove the hard drive.

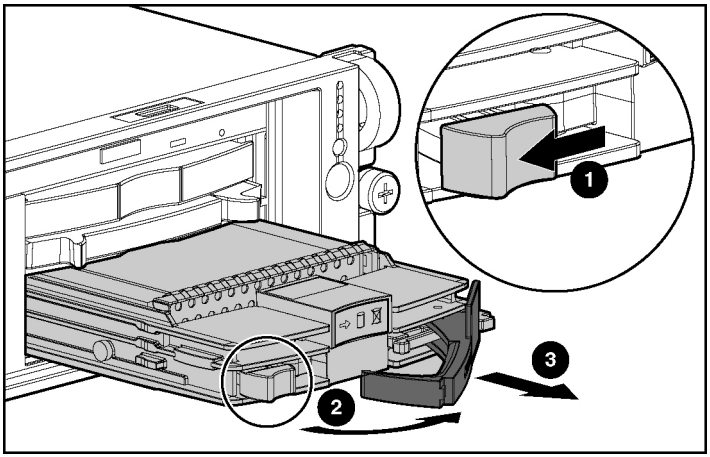

Installing a Hot-Plug SCSI Hard Drive

1. Remove the existing hard drive blank or hard drive from the drive bay ("Removing a Hard Drive Blank" on page 73, "Removing a Hot-Plug SCSI Hard Drive" on page 74).

2. Install the hard drive.

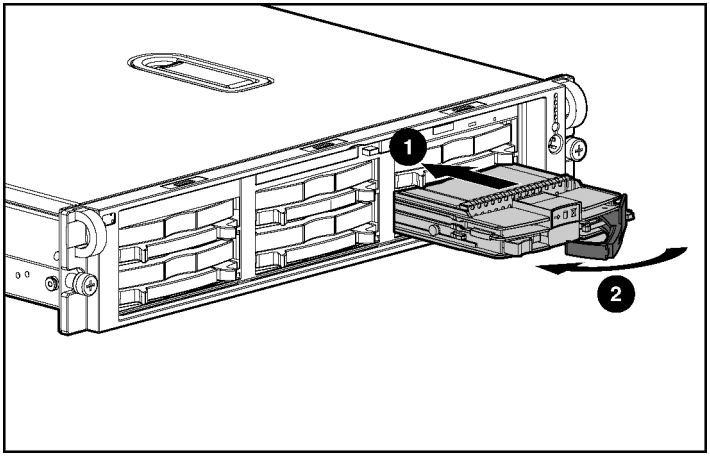

3. Determine the status of the hard drive from the hot-plug hard drive LEDs ("Hot-Plug SCSI Hard Drive LEDs" on page 26).
4. Resume normal server operations.

Hot-Plug Tape Drive Option

1. Remove the existing hard drive blank or hard drive from the upper-left drive bay ("Removing a Hard Drive Blank" on page 73, "Removing a Hot-Plug SCSI Hard Drive" on page 74).

2. Remove the tape drive blank.

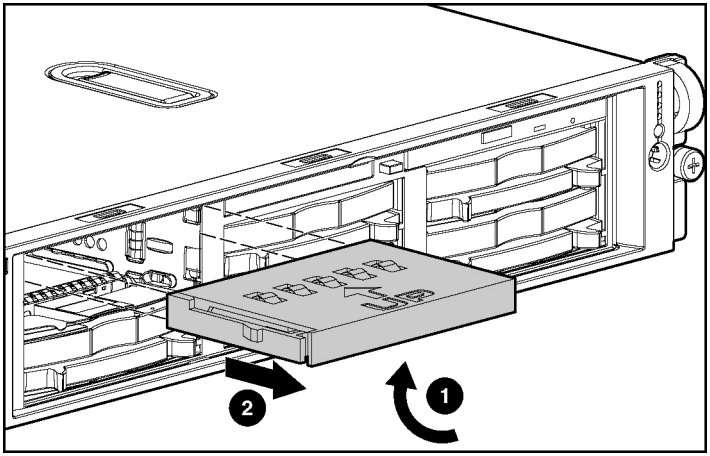

3. Install the tape drive.

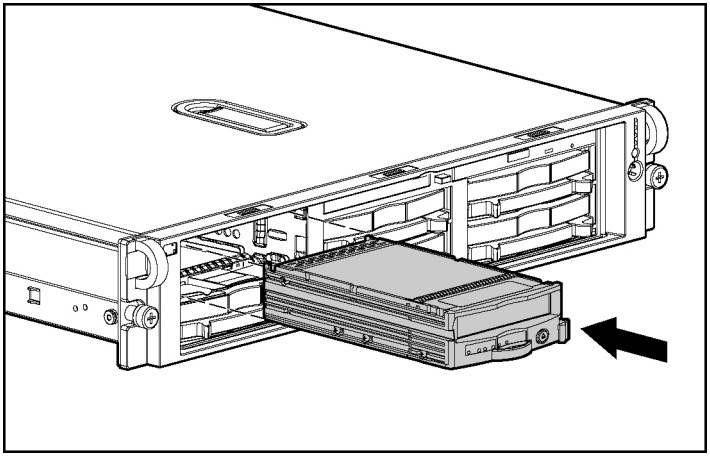

Battery-Backed Write Cache Enabler Option

The Battery-Backed Write Cache Enabler, also known as the battery module, provides transportable data protection, increases overall controller performance, and maintains any cached data for up to 72 hours. The NiMH batteries in the battery module are continuously recharged through a trickle-charging process whenever the system power is on. Under normal operating conditions, the battery module lasts for 3 years before replacement is necessary.

For information on battery module LEDs, refer to "Battery-Backed Write Cache Enabler LEDs (on page 34)" on the Documentation CD.

CAUTION: To prevent damage to the equipment or server malfunction, do not add or remove the battery module while an array capacity expansion, RAID level migration, or stripe size migration is in progress.

CAUTION: After the server is powered down, wait 15 seconds and then check the amber LED before unplugging the cable from the battery module. If the amber LED blinks after 15 seconds, do not remove the cable from the battery module. The battery module is backing up data, and data will be lost if the cable is detached.

IMPORTANT: The battery module may have a low charge when installed. In this case, a POST error message is displayed when the server is powered up, indicating that the battery module is temporarily disabled. No action is necessary on your part. The internal circuitry automatically recharges the batteries and enables the battery module. This process may take up to 4 hours. During this time, the array controller will function properly but without the performance advantage of the battery module.

NOTE: The data protection and the time limit also applies if a power outage occurs. When power is restored to the system, an initialization process writes the preserved data to the hard drives.

To install the Battery-Backed Write Cache Enabler:

1. Power down the server ("Powering Down the Server" on page 37).
2. Extend the server from the rack, if applicable ("Extending the Server from the Rack" on page 38).

3. Remove the access panel ("Removing the Access Panel" on page 40).
4. Remove the battery module bracket from the server.

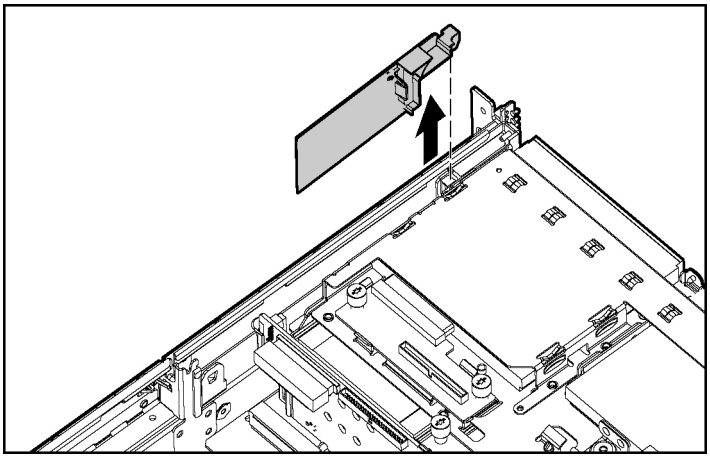

5. Install the battery module into the bracket.

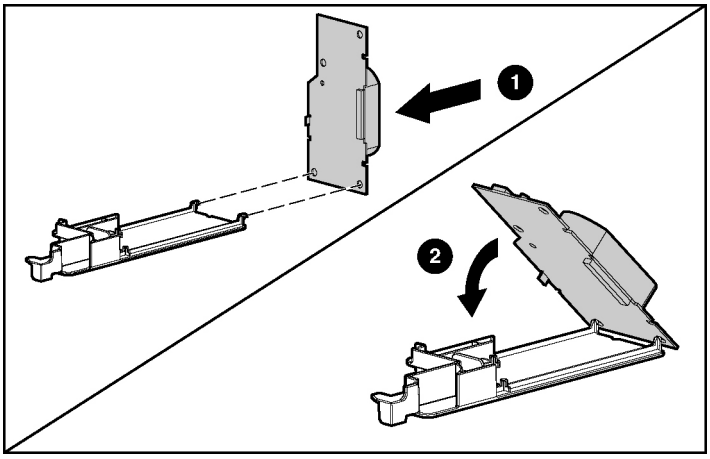

6. Connect the cable and install the battery module assembly into the server.

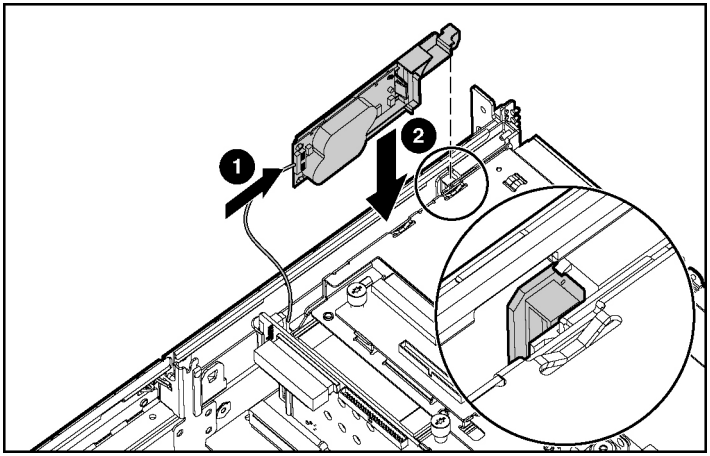

7. Install the access panel ("Installing the Access Panel" on page 40).
8. Power up the server ("Powering Up the Server" on page 37).

Refer to the option documentation for more information.

Redundant Hot-Plug Fans

The server supports redundant hot-plug fans to provide proper airflow to the system if a primary fan fails. The server airflow is divided into three zones: processor, I/O, and power supply. Shared fans 4 and 7 each provide airflow for two zones. If a shared fan fails, the failure is experienced in both zones.

In the standard configuration, five fans cool the server: fans 2, 4, 5, 6, and 7 in the processor zone; fan 4 in the I/O zone; and fan 7 in the power supply zone.

For the redundant configuration, fans 1, 3, and 8 (one fan per zone) are added to cool the server. This allows the server to continue operation in non-redundant mode if only one fan fails per zone.

The server shuts down in the following scenarios:

- At POST:

- The BIOS suspends the server for 5 minutes if it detects a cautionary temperature level. If the cautionary temperature level is still detected after 5 minutes, the BIOS performs an orderly shutdown and then restarts. This process repeats until the cautionary temperature level is no longer detected.
- The BIOS performs an orderly shutdown if the following minimum requirements are not met: one working fan in the I/O zone, five working fans in the processor zone, and one working fan in the power supply zone.
- The server performs an immediate shutdown if it detects a critical temperature level.

  IMPORTANT: An immediate shutdown is a hardware-controlled function and it overrides any firmware or software actions.

- In the operating system:
  - With the Health Driver loaded and Thermal Shutdown enabled in RBSU, the Health Driver performs an orderly shutdown if it detects a cautionary temperature level. If the server detects a critical temperature level before the orderly shutdown occurs, the server performs an immediate shutdown. Additionally, the Health Driver performs an orderly shutdown if the following minimum requirements are not met: one working fan in the I/O zone, five working fans in the processor zone, and one working fan in the power supply zone.
  - With the Health Driver loaded and Thermal Shutdown disabled in RBSU, the server performs an immediate shutdown if it detects a critical temperature level.
  - Without Health Driver loaded, the server performs an immediate shutdown if it detects a critical temperature level.

    IMPORTANT: An immediate shutdown is a hardware-controlled function and it overrides any firmware or software actions.

Installation Requirements

WARNING: To reduce the risk of electric shock, personal injury, and damage to the equipment:

- **Do not attempt to service any parts of the equipment other than those specified in the following procedure. Any other activities may require that you shut down the server and remove the power cord.**
- **Installation and maintenance of this product must be performed by individuals who are knowledgeable about the procedures, precautions and hazards associated with the product.**

You must observe the following requirements when installing redundant hot-plug fans:

- To ensure optimum cooling, populate the primary fan locations, 2, 4, 5, 6, and 7, before populating the redundant locations.
- If a primary fan fails, replace the nonfunctioning fan before installing fans in redundant locations.

Identifying Hot-Plug Fans

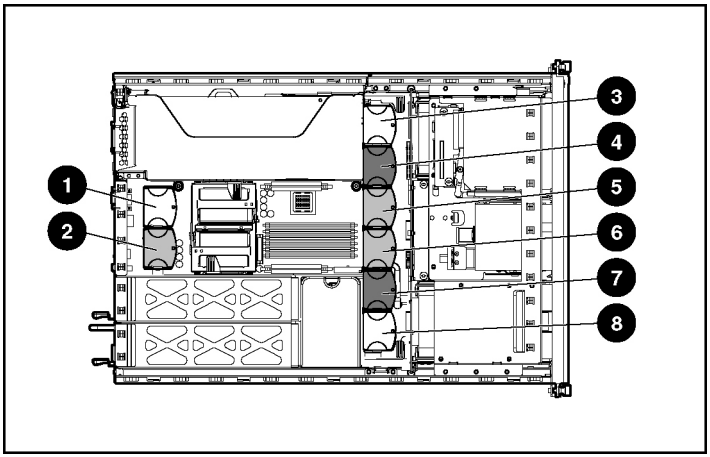

Item	Description	Zone	Configuration
1	Fan 1	Processor	Redundant
2	Fan 2	Processor	Primary
3	Fan 3	I/O	Redundant
4	Fan 4	I/O and processor	Primary (shared)
5	Fan 5	Processor	Primary
6	Fan 6	Processor	Primary
7	Fan 7	Power supply and processor	Primary (shared)
8	Fan 8	Power supply	Redundant

Installing Redundant Hot-Plug Fans

1. Extend the server from the rack, if applicable ("Extending the Server from the Rack" on page 38).
2. Remove the access panel ("Removing the Access Panel" on page 40).

WARNING: The potential for personal injury exists if a hot surface is contacted. Use caution while performing hot-plug procedures.

3. Install the fan.

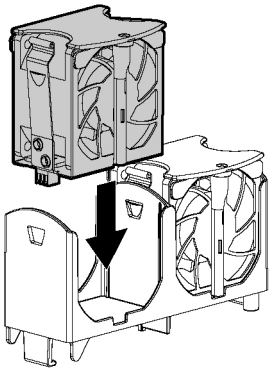

4. Be sure that the fan LED is green ("Hot-Plug Fan LED" on page 33).
5. Install the access panel ("Installing the Access Panel" on page 40).
6. Be sure that the front panel internal health LED is green ("Front Panel LEDs and Buttons" on page 11).

Redundant Hot-Plug AC Power Supply Option

CAUTION: To prevent improper cooling and thermal damage, do not operate the server unless all bays are populated with either a component or a blank.

1. Unlock the hinge on the cable management arm and swing the arm away from the server.

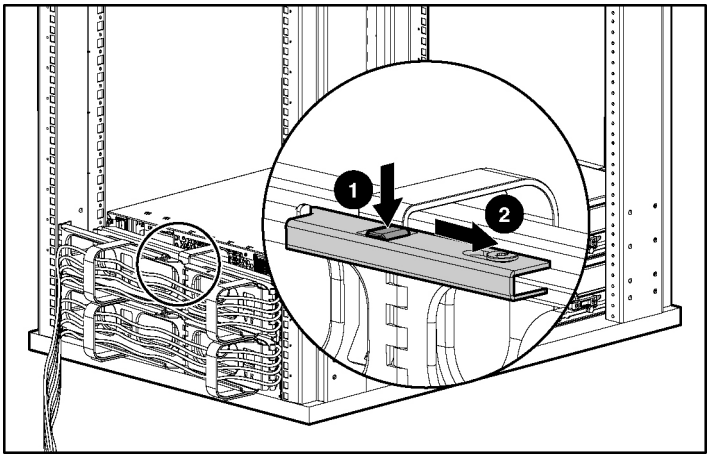

2. Remove the power supply blank.

WARNING: To reduce the risk of personal injury from hot surfaces, allow the power supply or power supply blank to cool before touching it.

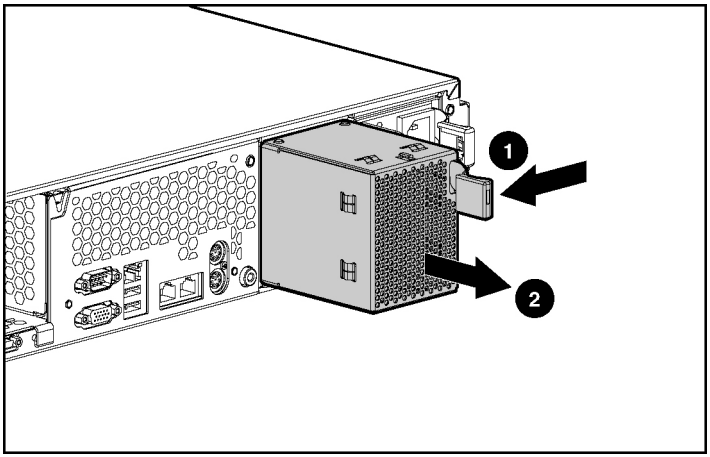

3. Remove the protective cover from the connector pins on the power supply.

WARNING: To reduce the risk of electric shock or damage to the equipment, do not connect the power cord to the power supply until the power supply is installed.

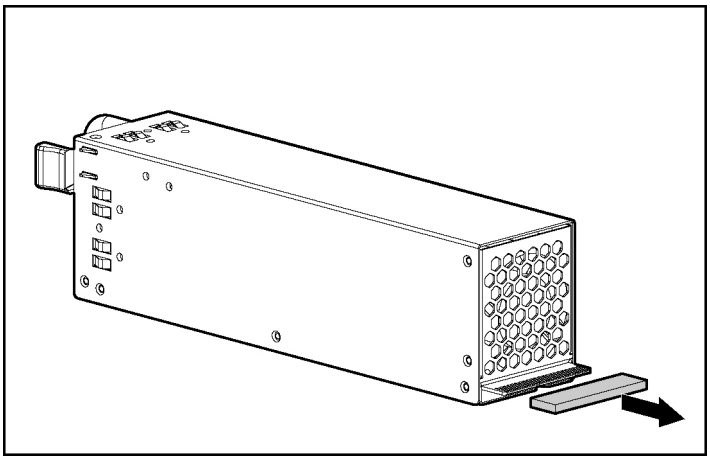

4. Slide the power supply into the power supply bay.

5. Connect the power cord to the power supply.
6. Route the power cord through the cable management arm or power cord anchor.

   NOTE: If using the power cord anchor, be sure to leave enough slack in the power cord so that the redundant power supply can be removed without disconnecting the power cord from the primary power supply.

7. Lock the cable management arm into the operating position.
8. Connect the power cord to the power source.
9. Be sure that the power supply LED is green ("Rear Panel LEDs and Buttons" on page 15).
10. Be sure that the front panel external health LED is green ("Front Panel LEDs and Buttons" on page 11).

DC Power Supply Option

WARNING: A risk of personal injury from electric shock and hazardous energy levels exists. The installation of options and routine maintenance and service of this product must be performed by individuals who are knowledgeable about the procedures, precautions, and hazards associated with DC power products.

WARNING: To reduce the risk of electric shock, fire, and damage to the equipment, this product must be installed in accordance with the following guidelines:

- **This power supply is intended only for installation in HP servers located in a restricted access location.**
- **This power supply is not intended for direct connection to the DC supply branch circuit. It should only be connected to a power distribution unit (PDU) that provides an independent overcurrent-protected output for each DC power supply. Each output overcurrent-protected device in the PDU must be suitable for interrupting fault current available from the DC power source and must be rated no more than 20A.**
- **This power supply is designed to be connected only to a DC power source that can be classified as SELV or TNV, in accordance with applicable national requirements for Information Technology Equipment and Telecommunications Equipment. Generally, these requirements are based on the International Standard for Information Technology Equipment, IEC 60950, and/or the European Telecommunication Standard ETS 300 132-2. The DC source is to have one pole (Neutral/Return) reliably connected to earth ground in accordance with local/regional electric codes and/or regulations.**
- **The green/yellow lead of the power cable assembly must be connected to a suitable ground/earth terminal located within the rack or cabinet. This terminal must be connected to a suitable building ground/earth terminal in accordance with local/regional electric codes/regulations. Do not rely on the rack or cabinet chassis to provide adequate ground/earth continuity.**

To install a DC power supply:

1. Unlock the hinge on the cable management arm and swing the arm away from the server.

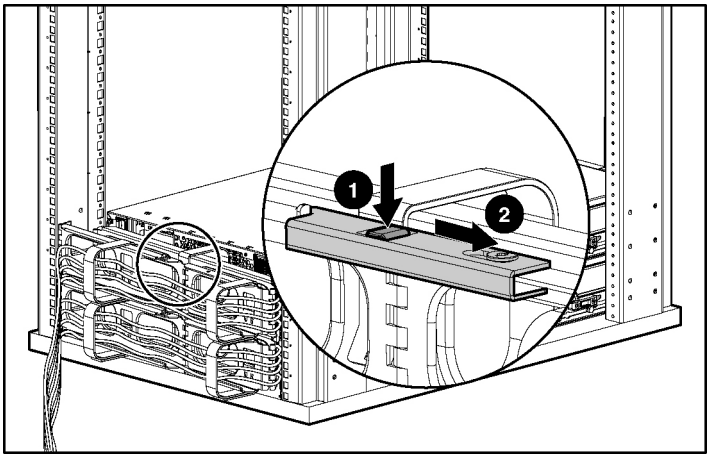

2. Identify the power supply configuration:
   - If AC power supplies are installed, power down the server, disconnect power cables from the back of the server, and continue with the next step.
   - If replacing a non-redundant DC power supply, power down the server, disconnect the power cable from the back of the server, and then skip to step 6.
   - If adding a redundant DC power supply, continue with the next step.
   - If replacing a redundant DC power supply, disconnect the power cord from the redundant power supply and skip to step 6.
3. Determine the needed length of the DC power cord:

   WARNING: To reduce the risk of electric shock or damage to the equipment, do not connect the power cord to the power supply until the power supply is installed.

   a. Place the power supply end of the DC power cord near the power supply bay area of the server. Do not plug the DC power cord into a power supply.

b. Route the power cord through the cable management arm, or power cord anchor, to a PDU or other suitable DC power source. Do not plug the DC power cord into the power source.

NOTE: If using the power cord anchor, be sure to leave enough slack in the power cord so that the redundant power supply can be removed without disconnecting the power cord from the primary power supply.

c. Trim the DC power cord as required.

4. Connect the free end of the DC power cord to the PDU or other suitable DC power source.
5. Connect the free end of the green/yellow safety wire to a suitable earth ground.

IMPORTANT: If the power supply fails to operate, the blue and black wires may be connected incorrectly. When connected properly, the black wire should be at a higher potential (more positive) relative to the blue wire. The power supply features reverse polarity protection so that no damage occurs if the power supply is connected incorrectly.

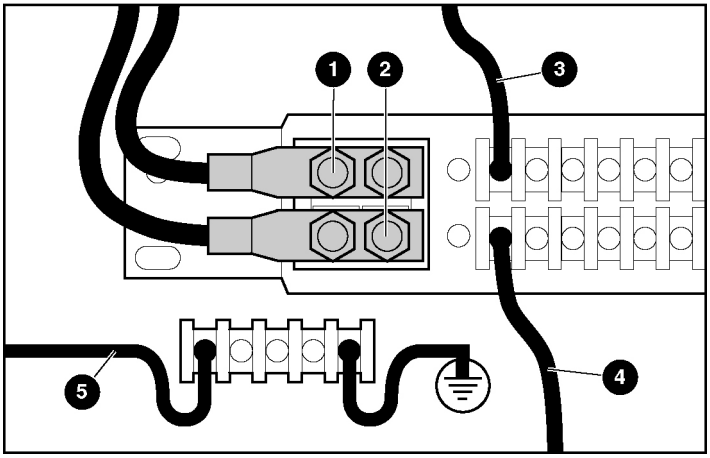

Item	Description
1	-48 V DC cable from facility power source
2	-48 V return cable from facility power source
3	Blue cable from power supply
4	Black cable from power supply
5	Green/yellow cable from power supply connecting to rack chassis terminal block

6. Remove the existing power supply or power supply blank.

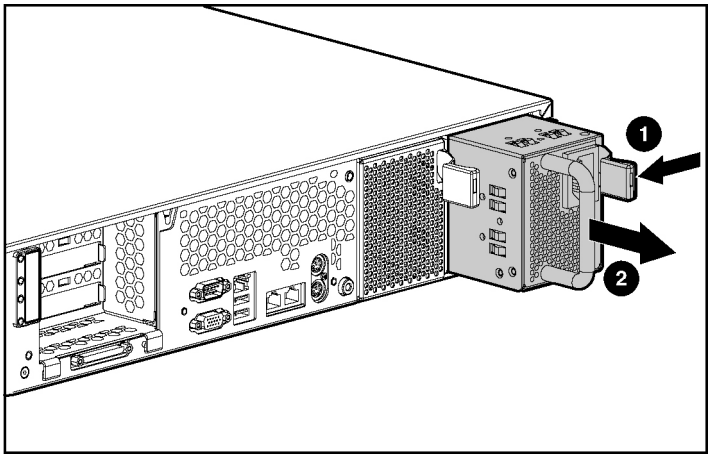

7. Remove the protective cover from the connector pins on the new power supply.

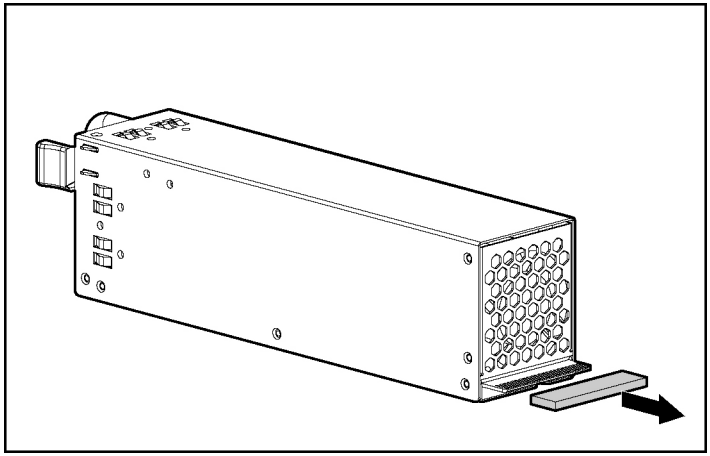

8. Slide the power supply into the power supply bay.
9. Connect the DC power cord to the power supply.
10. Lock the cable management arm into the operating position.
11. Power up the server if it was previously powered down ("Powering Up the Server" on page 37).
12. Be sure that the power supply LED is green ("Rear Panel LEDs and Buttons" on page 15).
13. Be sure that the front panel external health LED is green ("Front Panel LEDs and Buttons" on page 11).

Expansion Board Options

The server supports PCI and PCI-X expansion boards.

IMPORTANT: The optional RILOE II board can be installed only in slot 1. If you plan to install a RILOE II board in the future, leave slot 1 unpopulated.

Removing Expansion Slot Cover 1

1. Power down the server ("Powering Down the Server" on page 37).

2. Extend or remove the server from the rack ("Extending the Server from the Rack" on page 38).
3. Remove the access panel ("Removing the Access Panel" on page 40).
4. Remove the PCI riser cage ("Removing the PCI Riser Cage" on page 40).

CAUTION: To prevent damage to the server or expansion boards, power down the server and remove all AC power cords before removing or installing the PCI riser cage.

5. Remove the expansion slot cover.

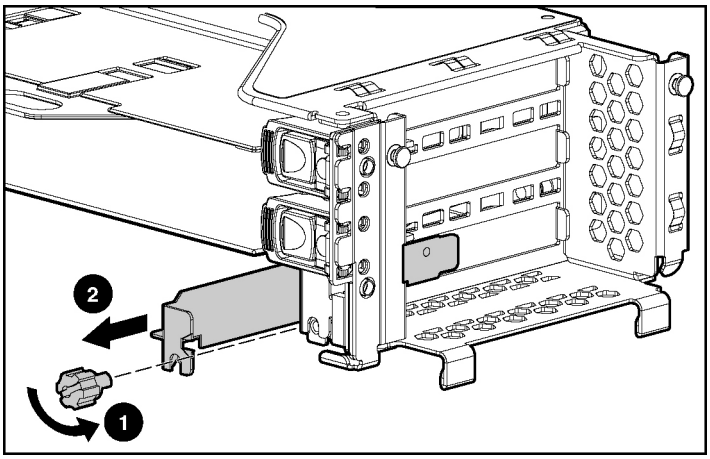

CAUTION: To prevent improper cooling and thermal damage, do not operate the server unless all PCI slots have either an expansion slot cover or an expansion board installed.

To replace the component, reverse the removal procedure.

Removing Expansion Slot Covers 2 and 3

1. Extend or remove the server from the rack ("Extending the Server from the Rack" on page 38).
2. Remove the access panel ("Removing the Access Panel" on page 40).

3. Open the PCI riser cage door.

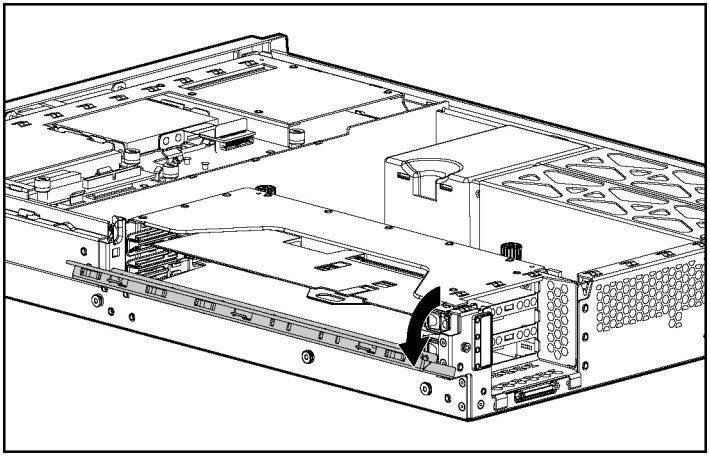

CAUTION: To prevent improper cooling and thermal damage, do not operate the server unless all PCI slots have either an expansion slot cover or an expansion board installed.

4. Remove the expansion slot cover.

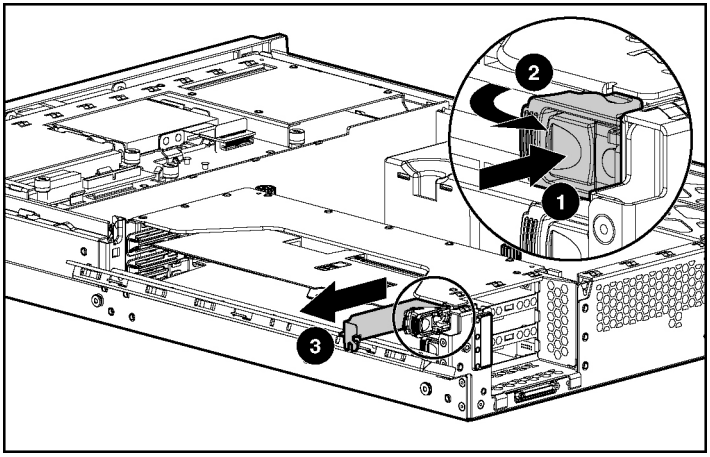

To replace the component, reverse the removal procedure.

Installing a Non-Hot-Plug Expansion Board

1. Power down the server ("Powering Down the Server" on page 37).
2. Extend the server from the rack, if applicable ("Extending the Server from the Rack" on page 38).
3. Remove the access panel ("Removing the Access Panel" on page 40).
4. Remove the PCI riser cage ("Removing the PCI Riser Cage" on page 40).

   CAUTION: To prevent damage to the server or expansion boards, power down the server and remove all AC power cords before removing or installing the PCI riser cage.

5. Remove the expansion slot cover for expansion slot 1 ("Removing Expansion Slot Cover 1" on page 91).
6. Unlock the PCI retaining clip.

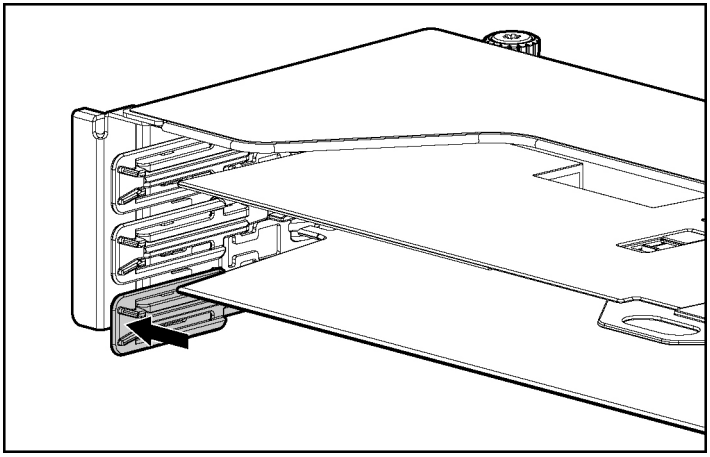

7. Install the expansion board.

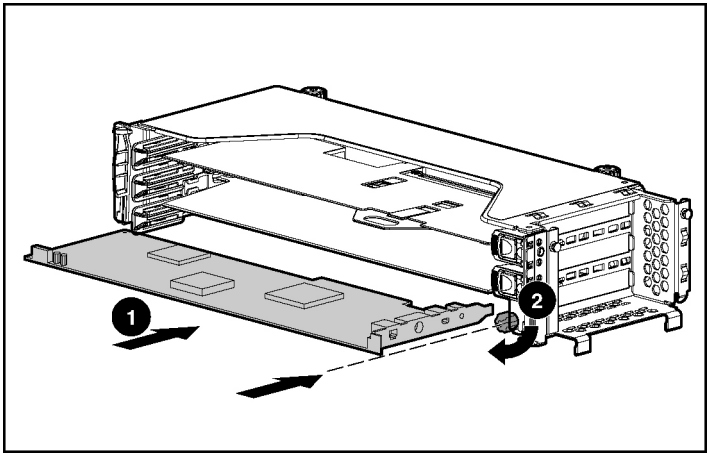

8. Lock the PCI retaining clip.
9. Install the PCI riser cage ("Installing the PCI Riser Cage" on page 42).
10. Connect any required internal or external cables to the expansion board. Refer to the documentation that ships with the expansion board.
11. Close the PCI riser cage door.
12. Install the access panel ("Installing the Access Panel" on page 40).

Installing PCI Hot Plug Expansion Boards

The server supports PCI Hot Plug technology, which works together with the server operating system to allow replacement, addition, and upgrade of expansion boards without powering down the server.

The server must have all the following to be PCI Hot Plug-capable:

- PCI Hot Plug system hardware (available in this server)
- PCI Hot Plug device drivers installed from the SmartStart CD
- Operating system with PCI Hot Plug support

For more information, refer to the *PCI Hot Plug Administration Guide* on the Documentation CD.

To install a hot-plug expansion board:

1. Extend the server from the rack, if applicable ("Extending the Server from the Rack" on page 38).
2. Remove the access panel ("Removing the Access Panel" on page 40).
3. Open the PCI riser cage door.

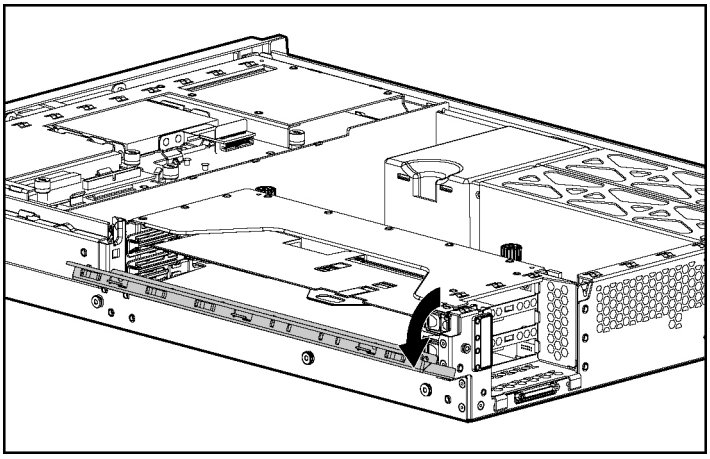

4. Press the PCI Hot Plug button to remove power from the slot. When the green power LED on the slot stops flashing, power has been removed from the slot.
5. Remove the expansion slot cover from the slot, if installed ("Removing Expansion Slot Covers 2 and 3" on page 92).

6. Unlock the PCI retaining clip.

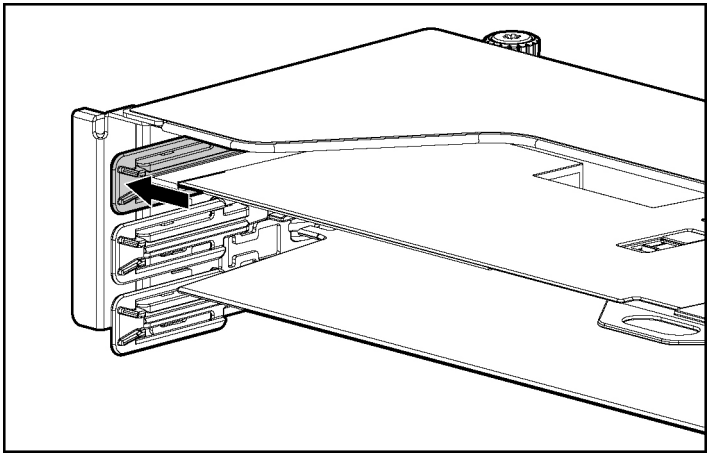

7. Install the expansion board.

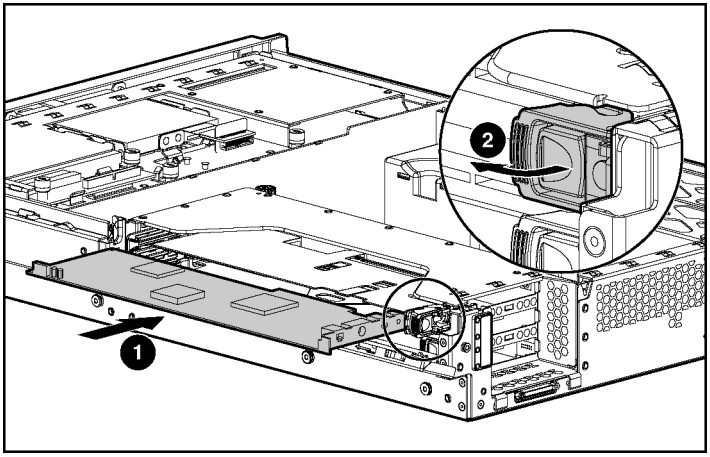

8. Lock the PCI retaining clip.
9. Connect any required internal or external cables to the expansion board. Refer to the documentation that ships with the expansion board.
10. Close the slot release lever.
11. Press the PCI Hot Plug button and wait for the power LED to illuminate green without flashing.

12. Close the PCI riser cage door.
13. Install the access panel ("Installing the Access Panel" on page 40).

Server Cabling

In This Section

Hot-Plug SCSI Hard Drive Cabling 99
CD-ROM Drive Cabling 105
Diskette Drive Cabling 106
Power Button/LED Cabling 106
PCI Hot Plug Backplane Cabling 107
RILOE II Cabling 108
Internal Power Cabling 108
External Storage Cabling 109

This section provides guidelines that help you make informed decisions about cabling the server and hardware options to optimize performance.

For information on cabling peripheral components, refer to the white paper on high-density deployment at the HP website (http://www.hp.com/products/servers/platforms).

Hot-Plug SCSI Hard Drive Cabling

IMPORTANT: If a simplex or duplex cabling configuration is not cabled correctly, the SCSI configuration error LED will illuminate. Refer to "SCSI Backplane LEDs (on page 25)" to locate the LED.

NOTE: The server ships with one long SCSI cable, two identical short SCSI cables, and a small terminator board to cable the server in the following configurations.

The simplex/duplex SCSI backplane supports four cabling configurations, including:

- Integrated simplex
- Integrated duplex

- PCI simplex
- PCI duplex

Integrated Simplex SCSI Cabling

In the integrated simplex cabling configuration, the embedded Smart Array 5i Plus Controller controls up to six hard drives through one SCSI bus. The server ships standard with this configuration.

NOTE: The server ships with the required cables.

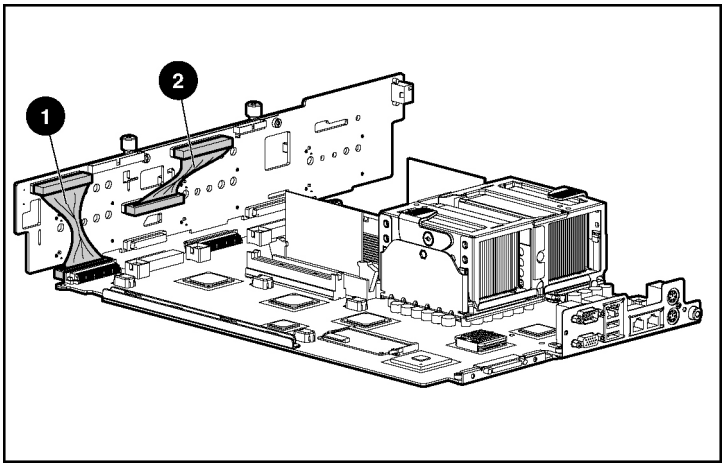

Item	Component description	SCSI IDs managed
1	Short SCSI cable	0, 1, 2, 3, 4, 5
2	Short SCSI cable used to jumper the two SCSI buses together	N/A
NOTE: The short SCSI cables are identical.		

Integrated Duplex SCSI Cabling

In the integrated duplex cabling configuration, the embedded Smart Array 5i Plus Controller controls up to six hard drives through two SCSI buses: one bus with up to two drives and the other bus with up to four drives.

NOTE: The server ships with the required cables and terminator board.

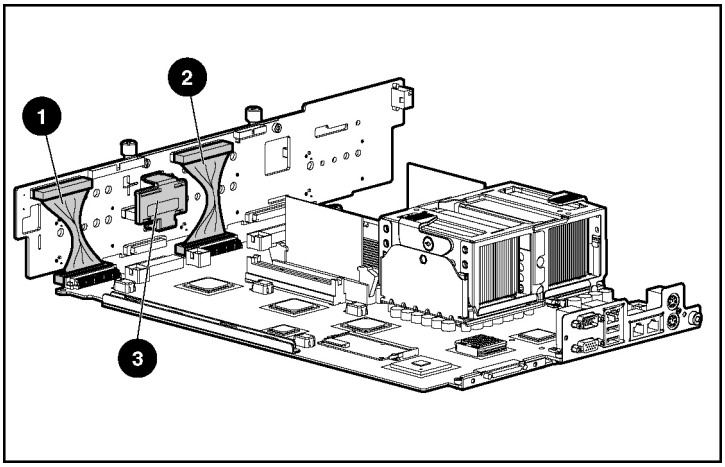

Item	Component description	SCSI IDs managed
1	Short SCSI cable	0, 1
2	Short SCSI cable	2, 3, 4, 5
3	Terminator board	N/A
NOTE: The short SCSI cables are identical.		

Refer to "Installing the SCSI Terminator Board (on page 103)" for SCSI terminator board installation procedures.

PCI Simplex SCSI Cabling

In the PCI simplex cabling configuration, an optional PCI array controller controls up to six hard drives through one SCSI bus.

NOTE: The server ships with the required cables.

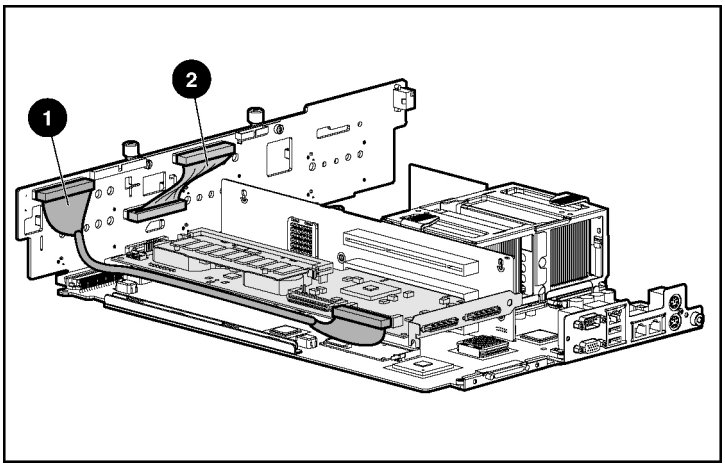

Item	Component description	SCSI IDs managed
1	Long SCSI cable	0, 1, 2, 3, 4, 5
2	Short SCSI cable used to jumper the two SCSI buses together	N/A

PCI Duplex SCSI Cabling

In the PCI duplex cabling configuration, the embedded Smart Array 5i Plus Controller controls up to two hard drives on one SCSI bus and the optional PCI array controller controls up to four hard drives on the other SCSI bus.

NOTE: The server ships with the required cables and terminator board.

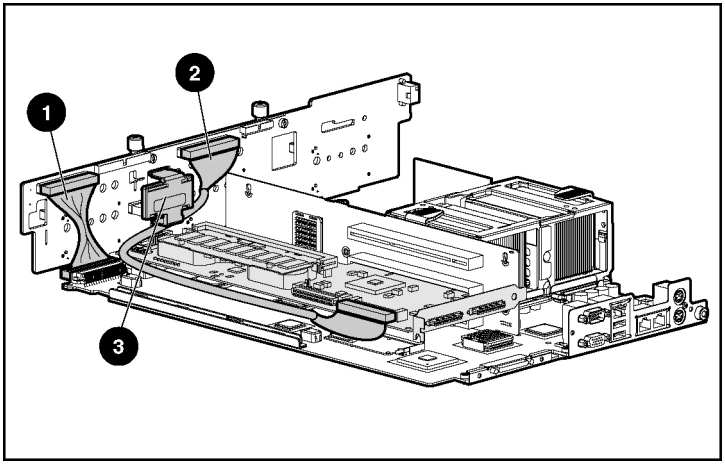

Item	Component description	SCSI IDs managed
1	Short SCSI cable	0, 1
2	Long SCSI cable	2, 3, 4, 5
3	Terminator board	N/A

Refer to "Installing the SCSI Terminator Board (on page 103)" for SCSI terminator board installation procedures.

Installing the SCSI Terminator Board

1. Power down the server ("Powering Down the Server" on page 37).
2. Extend or remove the server from the rack ("Extending the Server from the Rack" on page 38).
3. Remove the access panel ("Removing the Access Panel" on page 40).
4. Remove the front fan bracket.

IMPORTANT: For this procedure, you do not need to remove the hot-plug fans from the front fan bracket. When reinstalling the front fan bracket, press the top of each fan to be sure it seats securely.

NOTE: For more information on preparing the server for installation or removal procedures, refer to the Documentation CD.

5. Install the SCSI terminator board.

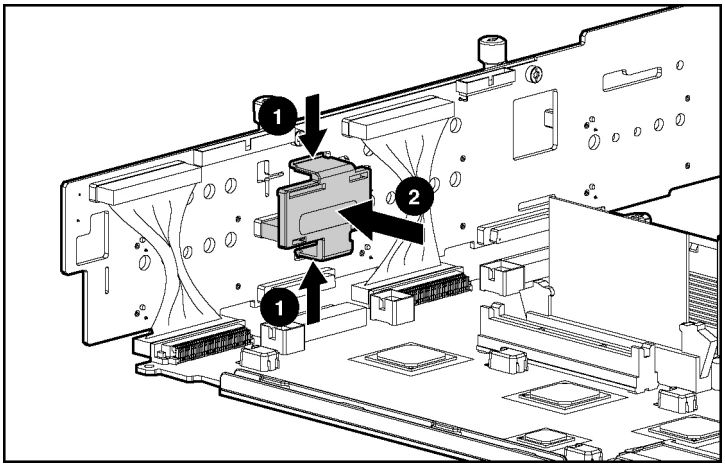

Removing the SCSI Terminator Board

1. Power down the server ("Powering Down the Server" on page 37).
2. Extend or remove the server from the rack ("Extending the Server from the Rack" on page 38).
3. Remove the access panel ("Removing the Access Panel" on page 40).
4. Remove the front fan bracket.

IMPORTANT: For this procedure, you do not need to remove the hot-plug fans from the front fan bracket. When reinstalling the front fan bracket, press the top of each fan to be sure it seats securely.

NOTE: For more information on preparing the server for installation or removal procedures, refer to the Documentation CD.

5. Remove the SCSI terminator board.

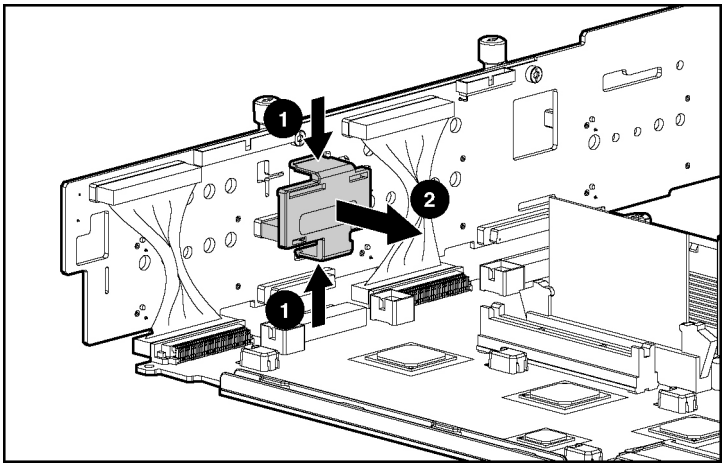

CD-ROM Drive Cabling

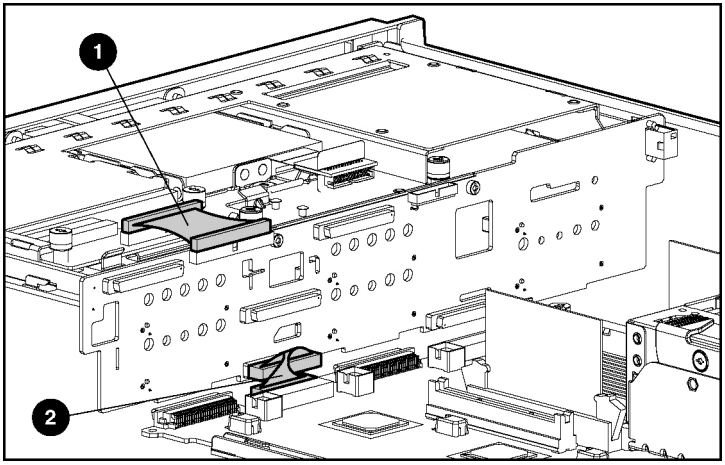

Item	Cable Description
1	CD-ROM drive cable
2	CD-ROM drive system cable

Diskette Drive Cabling

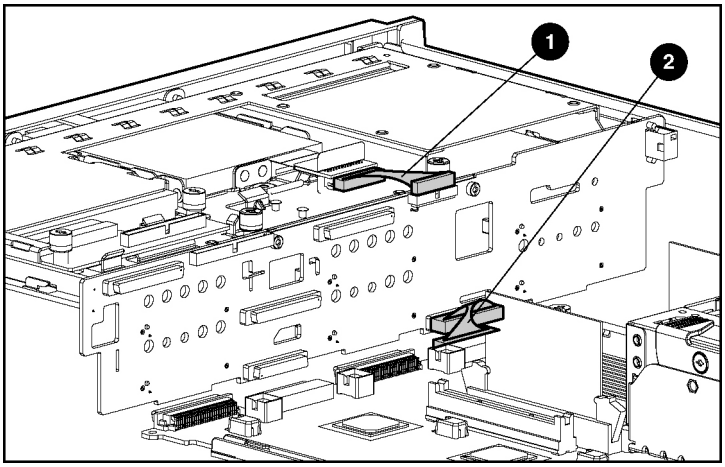

Item	Cable Description
1	Diskette drive cable
2	Diskette drive system cable

Power Button/LED Cabling

The power button/LED cable connects the power button/LED board to the SCSI backplane.

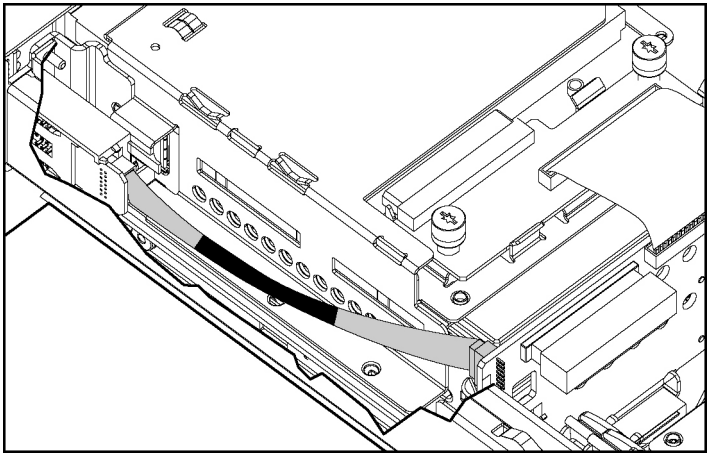

PCI Hot Plug Backplane Cabling

The server contains a PCI Hot Plug backplane that is part of the PCI riser cage. The PCI Hot Plug backplane provides hot-plug capability to two expansion slots. A ribbon cable connects the PCI Hot Plug backplane to the riser board.

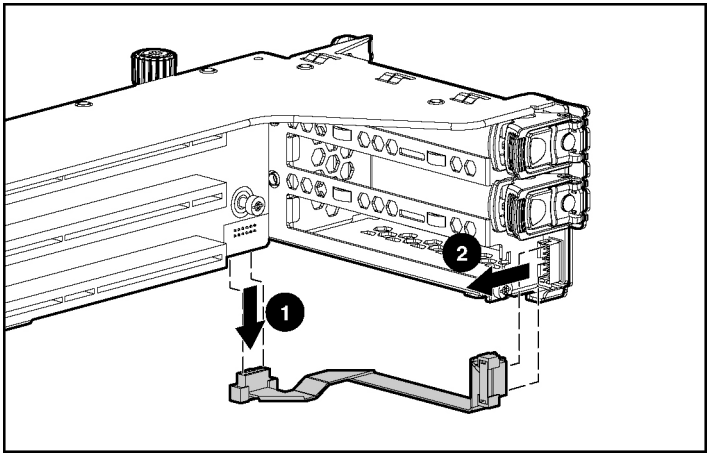

RILOE II Cabling

The 30-pin Remote Insight cable ships with the RILOE II cable kit. For more information, refer to the *Remote Insight Lights-Out Edition II User Guide* on the Documentation CD.

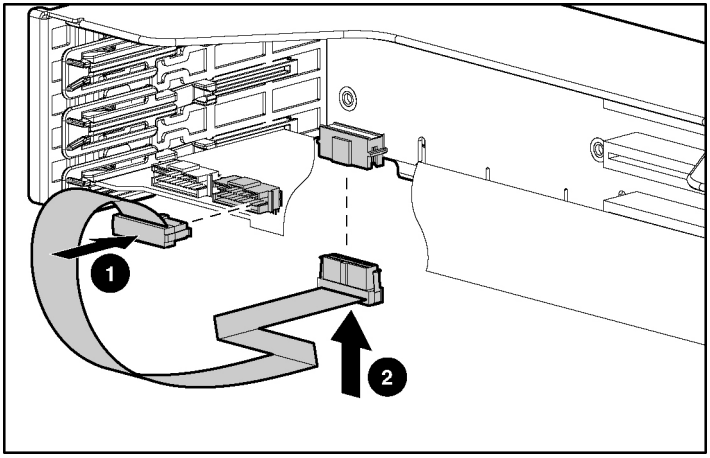

Internal Power Cabling

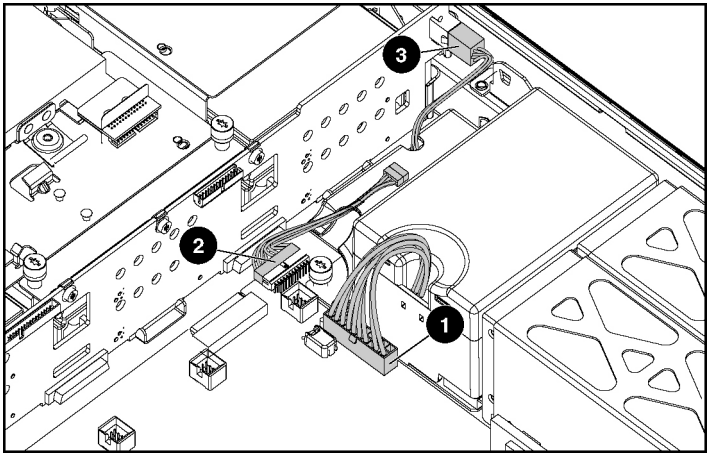

Item	Description
1	System power cable
2	Power supply signal cable
3	SCSI power cable

External Storage Cabling

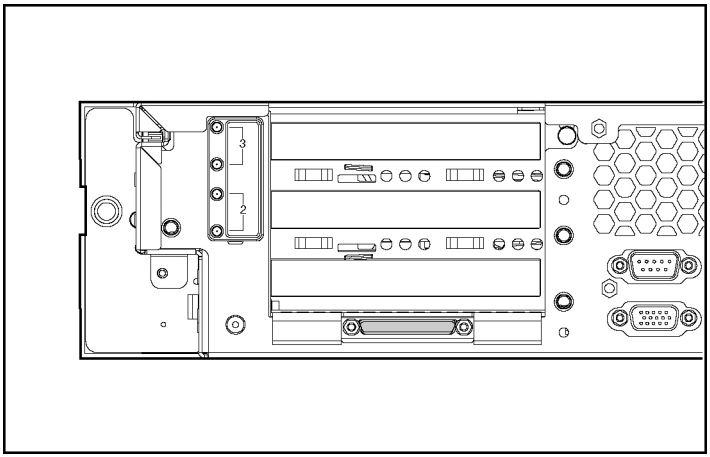

The external VHDCI SCSI connector (port 1) can only be used in the following SCSI configurations:

- Integrated simplex
- PCI simplex
- PCI duplex

After cabling external storage options, use the following software utilities:

- RBSU, to configure new hardware in the system

  For more information, refer to "ROM-Based Setup Utility (on page 111)" or the *ROM-Based Setup Utility User Guide* on the Documentation CD.

- ORCA, to configure and manage drive arrays

For more information, refer to the *Smart Array 5i Plus Controller and Battery-Backed Write Cache Enabler User Guide* on the Documentation CD.

For more information on external cabling, refer to the HP website (http://www.hp.com/products/servers/platforms).

Server Configuration and Utilities

In This Section

ROM-Based Setup Utility 111
Redundant ROM Support 119
ROMPaq Utility 120
System Online ROM Flash Component Utility 121
USB Support 121
SmartStart Software 122
Drivers 124
Option ROM Configuration for Arrays 124
Management Agents 125
Insight Manager 7 125
Automatic Server Recovery-2 126
Survey Utility 126
Integrated Management Log 126

ROM-Based Setup Utility

RBSU performs a wide range of configuration activities including the following:

- Configuring system devices and installed options
- Displaying system information
- Selecting the operating system
- Selecting the primary boot controller
- Configuring online spare memory

For more information on RBSU, refer to the *HP ROM-Based Setup Utility User Guide* on the Documentation CD or the white paper on the HP website (ftp://ftp.compaq.com/pub/products/servers/management/rbsu-whitepaper.pdf).

Using RBSU

The first time you power up the server, the system prompts you to enter RBSU, select an operating system, and select a language. Default configuration settings are made at this time and can be changed later. Most of the features in RBSU are not required to set up the server.

To navigate RBSU, use the following keys:

- To access RBSU, press the **F9** key during power up.
- To navigate the menu system, use the arrow keys.
- To make selections, press the **Enter** key.

IMPORTANT: RBSU automatically saves settings when you press the **Enter** key. The utility does not prompt you for confirmation of settings before you exit the utility. To change a selected setting, you must select a different setting and press the **Enter** key.

System Options Menu

The **System Options** menu is for overall system configuration settings. The following selections are included on this menu:

- **OS Selection** allows you to select the operating system.
- **Serial Number** allows you to change the serial number. It is recommended that you do not change the serial number.
- **Embedded COM Port** sets the configuration for the internal serial port.
- **Integrated Diskette Controller** enables or disables the diskette drive. By default, this setting is **Enabled**.
- **NUMLOCK Power-On State** enables or disables the keyboard NUMLOCK feature when the server starts. By default, this setting is **On**.
- **Embedded NIC 1 PXE Support** enables or disables PXE support for NIC 1. By default, this setting is **Enabled**.
- **Embedded NIC 2 PXE Support** enables or disables PXE support for NIC 2. By default, this setting is **Disabled**.

NOTE: You can enable PXE support for only one NIC at a time.

- **Diskette Write Control** sets the write controls for the diskette drive. By default, this setting is **Read and Write**.
- **Diskette Boot Control** enables the diskette drive to be used as a boot device. By default, this setting is **Enabled**.
- **Advanced Memory Protection** provides additional memory protection beyond ECC. By default, the server is set to **Advanced ECC Support**.

PCI Devices Menu

The **PCI Devices** menu displays the configuration settings of the PCI devices installed in the server and allows you to modify the IRQ. Multiple PCI devices can share an interrupt.

To disable a device, select the device and press the **Enter** key. A menu is displayed with options to change the IRQ, as well as to disable the device.

Standard Boot Order (IPL) Menu

The **Standard Boot Order (IPL)** option configures the Initial Program Load (IPL) device, and controls the search order the server uses to look for a bootable device.

Boot Controller Order Menu

The **Boot Controller Order** option selects which of the installed mass storage devices is used as the primary boot controller.

Date and Time Menu

The **Date and Time** option sets the system time and date.

Automatic Server Recovery Menu

The **ASR** menu includes the following options:

- **ASR Status** enables or disables ASR. By default, this setting is **Enabled**.

- **ASR Timeout** sets a timeout limit for resetting a server that is not responding. The default timeout limit is 10 minutes.
- **Thermal Shutdown** determines when the server automatically powers down due to dangerous temperatures. When the setting is enabled, the Health Driver initiates a shutdown of the system when the server temperature is within 5 degrees of critical level. When the setting is disabled, the Health Driver shuts down the system at critical level. By default, this setting is **Enabled**.

Server Passwords Menu

The **Server Passwords** menu includes options that configure the password environment of the server:

- **Set Power-On Password** sets a password that controls access to the server during power-up. By default, this setting is blank.
- **Set Admin Password** sets a password to control access to the embedded administrative features of the server. By default, this setting is blank.
- **Network Server Mode** sets the server to operate in network server mode. By default, this setting is **Disabled**.

  IMPORTANT: Network server mode cannot be enabled until the power-on password has been established.

- **Quicklock** enables or disables the Quicklock feature. When set to **Enabled**, the keyboard can be locked by pressing the **Ctrl+Alt+L** keys. By default, this setting is **Disabled**. This feature is only available in network server mode.

Server Asset Text Menu

The **Server Asset Text** menu includes options that customize the system-specific text for the server. Menu options include:

- **Set Server Info Text** defines reference information for the server. By default, this setting is blank.
- **Set Administrator Info Text** defines reference information for the server administrator.

- **Set Service Contact Text** defines reference information for the service contact of the server.

Advanced Options Menu

The **Advanced Options** menu enables you to configure advanced options of the system. The following selections are available on this menu:

- **MPS Table Mode** is automatically set based on the operating system selected and is used for interrupt routing. By default, this setting is **Auto Set Table**.
- **Hot-Plug Resources** sets the hot-plug reservation mode. By default, this option is set to **Auto Set**.
- **POST Speed Up** quickens POST by disabling the extended power-up memory test. By default, this setting is **Enabled**.
- **POST F1 Prompt** configures the server so that when an error is encountered during the power-up sequence, you must press the **F1** key to proceed (**Enabled** option) or the system pauses ten seconds before proceeding (**Delayed** option). The **F1 Prompt** option can also be **Disabled**. By default, this setting is **Delayed**.
- **Redundant ROM Selection** toggles the server ROM between the current ROM and the backup ROM.
- **Erase Non-volatile Memory** resets the non-volatile memory of the server to an initial, factory state.
- **Erase NVRAM/Boot Space Disk** enables you to reset the configuration settings to their factory defaults and to erase the boot disk, including the operating system.
- **Set CPU Corrected** is used to indicate that the previously failed processor has been corrected or replaced.
- **Wake-On LAN** enables or disables the WOL feature for all NICs in the server. By default, this setting is **Enabled**.
- **NMI Debug Button** enables debug functionality when the system has experienced a software lock-up. By default, this setting is **Enabled**.

- **Custom POST Message** allows you to input a message that can be viewed during POST.
- **Processor Hyper-Threading** allows Intel Hyper-Threading technology to be enabled or disabled. Processor Hyper-Threading delivers two logical processors that can execute multiple tasks simultaneously using shared hardware resources of a single processor. By default, this setting is **Enabled**.

BIOS Serial Console Menu

The **BIOS Serial Console** option allows you to configure the serial port to view POST error messages and run RBSU remotely through a serial connection to the server COM port. The server that you are remotely configuring does not require a keyboard and mouse. For more information about BIOS Serial Console, and a copy of the *BIOS Serial Console User Guide*, refer to the Documentation CD.

Utility Language Menu

The **Utility Language** menu enables you to set the display language for RBSU.

Auto-Configuration Process

The auto-configuration process automatically runs when you boot the server for the first time. During the power-up sequence that occurs, the system ROM automatically configures the entire system without needing any intervention. During this process, the ORCA utility, in most cases, automatically configures the array to a default setting based on the number of drives connected to the server.

NOTE: The server may not support all of the following examples.

Drives Installed	Drives Used	RAID Level
1	1	RAID 0
2	2	RAID 1
3, 4, 5, or 6	3, 4, 5, or 6	RAID 5
More than 6	0	None
NOTE: If the boot drive is not empty or has been written to in the past, ORCA does not automatically configure the array. You must run ORCA to configure the array settings.		

To change any ORCA default settings and override the auto-configuration process, press the **F8** key when prompted.

By default, the auto-configuration process configures the system for a Microsoft Windows 2000 operating system and the English language. To change any default settings in the auto-configuration process, such as the settings for language, operating system, and primary boot controller, execute RBSU by pressing the **F9** key when prompted. After the settings are selected, exit RBSU and allow the server to reboot automatically.

For more information, refer to the *HP ROM-Based Setup Utility Guide* on the Documentation CD or the white paper on the HP website (ftp://ftp.compaq.com/pub/products/servers/management/rbsu-whitepaper.pdf).

Boot Options

After the auto-configuration process completes, or after the server reboots upon exit from RBSU, the POST sequence runs, and then the boot option screen is displayed. This screen is visible for several seconds before the system attempts to boot from either a diskette, CD, or hard drive. During this time, the menu on the screen allows you to install an operating system or make changes to the server configuration in RBSU.

Configuring Online Spare Memory

To configure online spare memory:

1. Install the required DIMMs ("Memory Options" on page 69).
2. Access RBSU by pressing the **F9** key during powerup when the prompt is displayed in the lower right corner of the screen.
3. Select **System Options**.
4. Select **Advanced Memory Protection**.
5. Select **Online Spare with Advanced ECC Support**.
6. Press the **Enter** key.
7. Press the **Esc** key to exit the current menu or press the **F10** key to exit RBSU.

For more information on online spare memory, refer to the white paper on the HP website (http://www.compaq.com/support/techpubs/whitepapers/tm010301wp.html).

Re-Entering the Server Serial Number

After you replace the system board or clear NVRAM, you must re-enter the server serial number.

1. During the server startup sequence, press the **F9** key to access RBSU.
2. Select the **System Options** menu.
3. Select **Serial Number**. The following warning is displayed:

   ```
   WARNING! WARNING! WARNING! The serial number is loaded
   into the system during the manufacturing process and
   should NOT be modified. This option should only be used
   by qualified service personnel. This value should always
   match the serial number sticker located on the chassis.
   ```
4. Press the **Enter** key to clear the warning.
5. Enter the serial number and press the **Enter** key.
6. Press the **Escape** key to close the menu.

7. Press the **Escape** key to exit RBSU.
8. Press the **F10** key to confirm exiting RBSU. The server will automatically reboot.

Redundant ROM Support

The server enables you to upgrade or configure the ROM safely with redundant ROM support. The server has a 2-MB ROM that acts as two, separate 1-MB ROMs. In the standard implementation, one side of the ROM contains the current ROM program version, while the other side of the ROM contains a backup version.

NOTE: The server ships with the same version programmed on each side of the ROM.

Safety and Security Benefits

When you flash the system ROM, ROMPaq writes over the backup ROM and saves the current ROM as a backup, enabling you to switch easily to the alternate ROM version if the new ROM becomes corrupted for any reason. This feature protects the existing ROM version, even if you experience a power failure while flashing the ROM.

Access to Redundant ROM Settings

To access the redundant ROM through RBSU:

1. Access RBSU by pressing the **F9** key during powerup when the prompt is displayed in the lower right corner of the screen.
2. Select **Advanced Options**.
3. Select **Redundant ROM Selection**.
4. Select one of the ROM banks as the system ROM.
5. Press the **Enter** key.
6. Press the **Esc** key to exit the current menu or press the **F10** key to exit RBSU.

7. Restart the server.

To access the redundant ROM manually:

1. Power down the server ("Powering Down the Server" on page 37).
2. Remove the access panel ("Removing the Access Panel" on page 40).
3. Set positions 1, 5, and 6 of the system maintenance switch to On.
4. Install the access panel ("Installing the Access Panel" on page 40).
5. Power up the server ("Powering Up the Server" on page 37).
6. Wait for the server to emit two beeps.
7. Repeat steps 1 and 2.
8. Set positions 1, 5, and 6 of the system maintenance switch to Off.
9. Repeat steps 4 and 5.

When the server boots, the system identifies whether the current ROM bank is corrupt. If a corrupt ROM is detected, the system boots from the backup ROM and alerts you through POST or IML that the ROM bank is corrupt.

If both the current and backup versions of the ROM are corrupt, the server automatically enters ROMPaq disaster recovery mode ("ROMPaq Disaster Recovery" on page 139).

ROMPaq Utility

Flash ROM enables you to upgrade the firmware (BIOS) with system or option ROMPaq utilities. To upgrade the BIOS, insert a ROMPaq diskette into the diskette drive and boot the system.

The ROMPaq utility checks the system and provides a choice (if more than one exists) of available ROM revisions. This procedure is the same for both system and option ROMPaq utilities.

For more information about the ROMPaq utility, refer to the HP website (http://www.hp.com/servers/manage).

System Online ROM Flash Component Utility

The Online ROM Flash Component Utility enables system administrators to efficiently upgrade system or controller ROM images across a wide range of servers and array controllers. This tool has the following features:

- Works offline and online
- Supports Microsoft Windows NT, Windows 2000, Windows .NET, Novell Netware, and Linux operating systems

  IMPORTANT: This utility supports operating systems that may not be supported by the server. For operating systems supported by the server, refer to the HP website (ftp://ftp.compaq.com/pub/products/servers/os-support-matrix-310.pdf).

- Integrates with other software maintenance, deployment, and operating system tools
- Automatically checks for hardware, firmware, and operating system dependencies, and installs only the correct ROM upgrades required by each target server

To download the tool and for more information, refer to the HP website (http://www.compaq.com/support/files/server/us/webdoc/rom/RemoteROMUser-001.pdf).

USB Support

HP provides both standard USB support and legacy USB support. Standard support is provided by the operating system through the appropriate USB device drivers. HP provides support for USB devices prior to the operating system loading through legacy USB support, which is enabled by default in the system ROM. HP hardware supports USB version 1.1.

Legacy USB support provides USB functionality in environments where USB support is normally not available. Specifically, HP provides legacy USB functionality at:

- POST
- RBSU

- Diagnostics
- DOS
- Environments which do not support USB natively

For more information on ProLiant USB support, refer to the HP website (http://www.compaq.com/products/servers/platforms/usb-support.html).

SmartStart Software

SmartStart software is a CD-based, single-server method for installing system software, thereby achieving a well-integrated server and ensuring maximum dependability and supportability. The SmartStart CD contains tools that diagnose problems with the server, configure storage arrays, and update the system ROM.

SmartStart software enables you to:

- Install selected server operating systems using packaged product CDs.
- Install the latest optimized drivers.
- Create and copy standard server configuration scripts using the Scripting Toolkit and Configuration Replication Utility.
- Test server hardware using the new Enterprise Diagnostics LX32 Utility.
- Update the latest system or option ROM using the ROM Update Utility.
- Install software drivers directly from the CD. With systems that have internet connection, the SmartStart Autorun Menu provides access to the complete list of ProLiant System Software on the website.

For more information about SmartStart software, refer to the HP website (http://www.hp.com/servers/smartstart).

SmartStart Autorun Menu

The SmartStart autorun menu, available on the SmartStart CD, enables access to the latest ProLiant support software. The SmartStart autorun menu enables the user to:

- Install the latest Support Packs.
- Browse the SmartStart CD and select software for creating diskettes.

The SmartStart autorun menu mimics the support software download pages from the HP website (http://www.hp.com), and enables access to the following software, depending on the ProLiant server supported:

- ProLiant Support Packs (PSPs), which includes software drivers, utilities and management agents
- System and Option ROMPaq diskettes
- Configuration utilities

To access additional software not found on the SmartStart autorun menu, refer to the HP website (http://www.hp.com/servers/smartstart) and select **Download Software and Drivers** in the left frame menu.

The SmartStart autorun menu runs on systems with one of the following configurations:

- Microsoft Windows NT 4.0 with Microsoft Internet Explorer 5.5 or later
- Microsoft Windows 2000 with Microsoft Internet Explorer 5.0 or later

To launch the SmartStart autorun menu, insert the SmartStart CD into the CD-ROM drive. The SmartStart autorun menu automatically runs.

- To install drivers, click **Install Software**.
- To access support software to create software diskettes, click **Browse CD**.

SmartStart Scripting Toolkit

The SmartStart Scripting Toolkit is a set of Microsoft MS-DOS-based utilities that enables you to configure and deploy servers in a customized, predictable, and unattended manner. These utilities provide scripted server and array replication for mass server deployment and duplicate the configuration of a source server onto target systems with minimum user interaction.

For more information, and to download the SmartStart Scripting Toolkit, refer to the HP website (http://www.hp.com/servers/sstoolkit).

Enterprise Diagnostics LX32 Utility

The Enterprise Diagnostics LX32 Utility displays information about the server hardware and tests the system to be sure that it is operating properly. You can access the Enterprise Diagnostics LX32 Utility from the SmartStart CD or from the HP website (http://www.hp.com/servers/manage).

For more information, refer to the Management CD in the *ProLiant Essentials Foundation Pack*.

Drivers

The server includes new hardware that may not have driver support on all operating system installation media. If you are installing a SmartStart supported operating system, use the SmartStart software and its Assisted Path feature to install the operating system and latest driver support. If you do not use the SmartStart CD to install an operating system, drivers for some of the new hardware are required. These drivers, as well as other option drivers, ROM images, and value-add software can be downloaded from the HP website (http://www.hp.com/support).

For more information on drivers, refer to the *Servers Troubleshooting Guide* on the Documentation CD.

Option ROM Configuration for Arrays

Before installing an operating system, you can use the ORCA utility to create the first logical drive, assign RAID levels, and establish online spare configurations.

The utility provides support for the following functions:

- Configuring one or more logical drives using physical drives on one or more SCSI buses
- Viewing the current logical drive configuration
- Deleting a logical drive configuration

If you do not use the utility, ORCA will default to the standard configuration.

For more information about array controller configuration, refer to the *Smart Array 5i Plus Controller and Battery-Backed Write Cache Enabler User Guide*, or the *HP ROM-Based Setup Utility User Guide* on the Documentation CD.

Management Agents

The server is equipped with the latest Management Agents, allowing easy manageability of the server through Insight Manager 7 software, and third-party SNMP management platforms. Management agents monitor key subsystems that are instrumental in making health, configuration, and performance data available to the agent software. The agents act upon that data by initiating alarms in the event of faults. The agents also provide updated management information, such as network interface or subsystem performance statistics, to the management systems.

For additional information, refer to the Management CD in the *ProLiant Essentials Foundation Pack* or the HP website (http://www.hp.com/servers/manage).

Insight Manager 7

Insight Manager 7 is a Web-based application that allows system administrators to accomplish normal administrative tasks from any remote location, using a Web browser. Insight Manager 7 provides device management capabilities that consolidate and integrate management data from HP and third-party devices.

> **IMPORTANT:** You must install and use Insight Manager 7 to benefit from the Pre-Failure Warranty for processors, hard drives, and memory modules.

For additional information, refer to the Management CD in the *ProLiant Essentials Foundation Pack*.

Automatic Server Recovery-2

ASR-2 is a feature that causes the system to restart when a catastrophic operating system error occurs, such as a blue screen, ABEND (abnormal end), or panic. A system fail-safe timer, the ASR-2 timer, starts when the System Management driver, also known as the Health Driver, is loaded. When the operating system is functioning properly, the system periodically resets the timer. However, when the operating system fails, the timer expires and restarts the server.

ASR-2 increases server availability by restarting the server within a specified time after a system hang or shutdown. At the same time, the Insight Manager 7 console notifies you by sending a message to a designated pager number that ASR-2 has restarted the system. You can disable ASR-2 from the Insight Manager 7 console or through RBSU.

Survey Utility

Survey Utility gathers critical hardware and software information on servers running Microsoft Windows NT, Novell NetWare, SCO OpenServer, or SCO UnixWare operating systems.

> **IMPORTANT:** This utility supports operating systems that may not be supported by the server. For operating systems supported by the server, refer to the HP website (ftp://ftp.compaq.com/pub/products/servers/os-support-matrix-310.pdf).

If a significant change occurs between data-gathering intervals, the Survey Utility marks the previous information and overwrites the Survey text files to reflect the latest changes in the configuration.

To install the Survey Utility, use the Management CD in the *ProLiant Essentials Foundation Pack* or refer to the HP website (http://www.hp.com/servers/manage).

Integrated Management Log

The IML records hundreds of events and stores them in an easy-to-view form. The IML timestamps each event with 1-minute granularity.

You can view recorded events in the IML in several ways, including the following:

- From within Insight Manager 7
- From within Survey Utility
- From within operating system-specific IML viewers
  - For NetWare: IML Viewer
  - For Windows: Event Viewer or IML Viewer
  - For Linux: IML Viewer Application
- From within Enterprise Diagnostics LX32 Utility

For more information, refer to the *HP Servers Troubleshooting Guide* on the Documentation CD, or the Management CD in the *ProLiant Essentials Foundation Pack*.

Server Specific Troubleshooting

In This Section

Minimum Hardware Configuration 129
Server Error Messages 130
When the Server Does Not Start 130
Diagnostic Steps 132
Problems After Initial Boot 137
ROMPaq Disaster Recovery 139
Other Information Resources 140

Minimum Hardware Configuration

Be sure that the server meets the requirements for a minimum hardware configuration. During the troubleshooting process, it may be necessary to reduce the system to its minimum configuration, reinstalling options one at a time to determine the cause of failure.

Component	Minimum Requirements
Processor	A processor must be installed in processor 1 socket with a PPM installed in PPM 1 slot.
Fans	The following fans must be installed: • Fan 2 (processor zone) • Fan 4 (I/O zone and processor zone) • Fan 5 (processor zone) • Fan 6 (processor zone) • Fan 7 (power supply zone and processor zone)
Memory	Two slots must be populated with ECC Registered DDR SDRAM DIMMs.
Hard Drives	One hard drive must be installed.

Server Error Messages

The following POST error messages are new to some ProLiant servers. For a complete listing of error messages, refer to the *Servers Troubleshooting Guide* on the Documentation CD.

Error Code	Audible Beeps	Possible Problem	Possible Action
207-Memory Configuration Warning - DIMM In DIMM Socket *X* does not have Primary Width of 4 and only supports standard ECC.	None	Installed DIMMs have a primary width of x8.	Install DIMMs that have a primary width of x4.
209-Online Spare Memory Configuration - Spare bank is invalid. Mixing of DIMMs with Primary Width of x4 and x8 is not allowed in this mode.	One long and one short	Installed DIMMs for online spare bank are of a different primary width than the DIMMs in other banks.	Install or reinstall DIMMs to support online spare configuration.
A mixture of 533 MHz and 400 MHz Front Side Bus Speed Processors Detected! Please make sure that all Processors have the same Front Side Bus Speed. - System Halted.	One long and one short	Processors have different front side bus speeds.	Install processors with the same front side bus speed.
This system only supports 400 MHz Front Side Bus Speed Processors. One or more 533 MHz Front Side Bus Speed Processors have been initialized at 400 MHz.	One long and one short	Front side bus speed of 533 MHz is not supported by the server model.	None. The system will run at the supported front side bus speed of 400 MHz.

When the Server Does Not Start

This section provides systematic instructions on what to try and where to go for help for the most common problems encountered during initial POST. The server must first complete this test each time you power up, before it can load the operating system and start running software applications.

If the server does not start:

1. Be sure that the server and monitor are plugged into a working outlet.
2. Be sure that the power source is working properly:
   - Check the status using the system power LED on the front panel.
   - Be sure that the Power On/Standby button was pressed firmly.
   - Refer to the *Servers Troubleshooting Guide* for details on checking proper power source operation.
3. Be sure that the power supplies are working properly:
   - Check the status using the power supply LEDs.
   - Refer to the *Servers Troubleshooting Guide* for details on checking power supply operation.
4. If the system does not complete POST or start loading an operating system, refer to the *Servers Troubleshooting Guide* for information on general loose connections.
5. If the server is rebooting repeatedly, be sure that the system is not rebooting due to a problem that initiates an ASR-2 reboot.

   You can enable ASR-2 to restart the server, automatically loading the operating system. Should a critical error occur, ASR-2 logs the error in the IML and restarts the server.

   Refer to the *Servers Troubleshooting Guide* for information on ASR-2 and system short circuiting.
6. Restart the server.
7. Check the server for the following normal power-up sequence to be sure that the system meets the minimal hardware requirements and is powered up during normal operations:
   a. The front panel power LED turns from standby (amber) to on (solid green).
   b. The fans start up.
8. Check the monitor, if you have a monitor installed, for the following messages that indicate the system meets the minimal hardware requirements and is powered up during normal operations:
   - ProLiant logo

- Memory test
- ROM information
- Copyright information
- Processor initialization
- Array controller initialization
- SCSI devices
- PXE initialization

The operating system loads to complete the boot process.

If the server completes POST and attempts to load the operating system, refer to "Problems After Initial Boot (on page 137)."

Diagnostic Steps

If the server does not power up, or powers up but does not complete POST, answer the questions in the following table to determine appropriate actions based on the symptoms observed.

According to the answers you give, you are directed to the appropriate table. That table outlines possible reasons for the problem, options available to assist in diagnosis, possible solutions, and references to other sources of information.

Question	Action
Question 1: Is the system power LED amber?	If yes, press the Power On/Standby button and then continue to question 2. If no, refer to "Is the System Power LED Amber? (on page 134)."
Question 2: Is the system power LED green?	If yes, continue to question 3. If no, refer to "Is the System Power LED Green? (on page 135)."
Question 3: Is the external health LED green?	If yes, continue to question 4. If no, refer to "Is the External Health LED Green? (on page 135)."
Question 4: Is the internal health LED green?	If yes, continue to question 5. If no, refer to "Is the Internal Health LED Green? (on page 136)."
Question 5: Is the monitor displaying information?	If yes, use the POST messages for further diagnosis. If no, refer to "Is the Monitor Displaying Information? (on page 137)."

Is the System Power LED Amber?

Answer	Possible Reasons	Possible Solutions
No	The server is not connected to AC power or no AC power is available. The power supply may not be inserted properly, it may have a damaged connector, or it may have failed. A broken connection exists between the following: • Power converter module and system board • Power converter module and SCSI backplane • SCSI backplane and power button/LED board The power converter module, system board, SCSI backplane, and/or power button/LED board may need to be replaced.	Be sure that the power cord is connected to the power supply. Be sure that the power supply is undamaged and is fully seated. Be sure that the system power and power supply signal cables are connected to the system board. Be sure that the CD-ROM drive cables are connected to the system board and SCSI backplane. Be sure that the power button/LED cable is connected to the SCSI backplane and power button/LED board. Be sure that all pins on connectors and components are straight. Refer to the *Servers Troubleshooting Guide* for further options regarding power and general hardware problems. Contact your authorized service provider for assistance.
Yes	If the system power LED is amber: 1. Press the Power On/Standby button. 2. Refer to "Is the System Power LED Green? (on page 135)."	

Is the System Power LED Green?

Answer	Possible Reasons	Possible Solutions
No	Power On/Standby button has not been pressed firmly. The power supply may not be inserted properly, it may have a damaged connector, or it may have failed. The system may have experienced a short. The power converter module, system board, SCSI backplane, and/or power button/LED board may need to be replaced. The PCI riser cage is not fully seated.	Firmly press the Power On/Standby button. Be sure that the power supply is undamaged and is fully seated. Be sure that all pins on connectors and components are straight. Reseat expansion boards. Reseat the PCI riser cage. Contact your authorized service provider for assistance.
Yes	If the system power LED is green, refer to "Is the External Health LED Green? (on page 135)."	

Is the External Health LED Green?

Answer	Possible Reasons	Possible Solutions
No, it is amber	Power supply redundancy is lost due to a power supply failure.	Be sure that the power supply is undamaged and fully seated, or identify and replace the failed power supply. Contact your authorized service provider for replacement parts and service.
No, it is red	All installed power supplies have failed. The system may have experienced a short.	Contact your authorized service provider for replacement parts and service.
Yes	If the external health LED is green, refer to "Is the Internal Health LED Green? (on page 136)."	

Is the Internal Health LED Green?

Answer	Possible Reasons	Possible Solutions
No, it is amber	A processor or DIMM is in pre-failure condition. One memory bank is valid, but another bank is missing a DIMM or has a mismatched or unsupported DIMM installed. A memory bank has failed and the online spare memory feature has copied information to the redundant bank. A redundant fan has failed.	Use amber failure LEDs to identify: • Missing components • Degraded components • Failed components • Improperly installed components Contact your authorized service provider for replacement parts and service.
No, it is red	A processor, PPM, power converter module, or primary fan has failed. Processor 1 or PPM 1 is not installed. A processor is an unsupported type. Processors are mismatched (speed and/or type). A DIMM has experienced a multibit error. No valid memory is in the system. Populated banks have unsupported, mismatched, or missing DIMMs. The SCSI cabling or terminator configuration is incorrect on SCSI backplane. The PCI riser cage is unseated. An overtemperature condition has occurred.	Use amber failure LEDs to identify: • Missing components • Failed components • Improperly installed components • Overtemperature event Contact your authorized service provider for replacement parts and service.
Yes	If the internal health LED is green, refer to "Is the Monitor Displaying Information? (on page 137)."	

Is the Monitor Displaying Information?

Answer	Possible Reasons	Possible Solutions
No	The monitor may not have power. Video may not be connected properly. Nonvolatile RAM (NVRAM) may be corrupted. The system ROM and redundant ROM may be corrupted. The system board and/or PCI riser cage may need to be replaced.	Be sure that the monitor power cord is plugged in and that the monitor power switch has been pressed. If a video board is installed, be sure that the video cable is properly connected. If a RILOE II board is installed, be sure that the video cable is connected to the video connector on the RILOE II board. Check the video connections. Refer to the *Servers Troubleshooting Guide* for information on video problems. Clear NVRAM in RBSU. Are there any audible indicators, such as a series of beeps? A series of beeps is the audible signal indicating the presence of a POST error message. Refer to the *Servers Troubleshooting Guide* for a complete description of each beep sequence and the corresponding error messages. Contact your authorized service provider for assistance.
Yes	Video is available for diagnosis. Determine the next action by observing POST progress and error messages. Refer to the *Servers Troubleshooting Guide* for a complete description of each POST error message.	

Problems After Initial Boot

- System Cannot Load SmartStart (on page 138)
- SmartStart Fails During Installation (on page 138)
- SmartStart Cannot Load Operating System (on page 139)

System Cannot Load SmartStart

Possible Cause	Possible Solution
A SmartStart requirement is not met.	Check the SmartStart Release Notes provided in the SmartStart Online Reference Information on the SmartStart CD.
A CD-ROM drive cable is not connected to CD-ROM drive.	Be sure the CD-ROM drive cables are properly connected.
Existing software is causing conflict.	Clear NVRAM and boot drives in RBSU and reinstall the operating system.
IMPORTANT: Clearing NVRAM removes user data from the boot drives. To clear NVRAM and erase the boot drives, select the **Advanced Options** menu in RBSU, and then select **Erase NVRAM/Boot Space Disk**.	

SmartStart Fails During Installation

Possible Cause	Possible Solution
An error occurs during installation.	Follow the error information provided. If necessary, clear NVRAM in RBSU and reinstall the operating system.
The CMOS is not cleared.	Clear NVRAM in RBSU and reinstall the operating system.
IMPORTANT: Clearing NVRAM removes user data from the boot drives. To clear NVRAM and erase the boot drives, select the **Advanced Options** menu in RBSU, and then select **Erase NVRAM/Boot Space Disk**.	

SmartStart Cannot Load Operating System

Possible Cause	Possible Solution
Required operating system step was missed.	Follow these steps: 1. Note at which phase the operating system failed. 2. Remove any loaded operating system. 3. Refer to the operating system documentation. 4. Install the operating system again.
Installation problem occurred.	Refer to the operating system documentation and to the SmartStart Release Notes on the SmartStart CD. Run RBSU and check the **OS Selection** menu.
Problem was encountered with the hardware you have added to the system.	Refer to the documentation provided with the hardware.
Problem was encountered with hardware added to a new configure-to-order system (where available).	You must complete the factory-installed operating system software installation before adding new hardware to the system. Be sure you are following the instructions provided in the *HP Factory-Installed Operating System Software Installation Guide*. Remove the new hardware and complete the software installation. Then, reinstall the new hardware.

ROMPaq Disaster Recovery

If both the current and backup versions of the ROM are corrupt, perform ROMPaq disaster recovery procedures:

1. Create a ROMPaq diskette using the Autorun Menu on the SmartStart CD.
2. Power down the server ("Powering Down the Server" on page 37).
3. Insert the ROMPaq diskette.

4. Power up the server ("Powering Up the Server" on page 37).
   a. The server generates one long beep and two short beeps to indicate that you are in disaster recovery mode. If the diskette is not in place, the system continues to beep until a valid ROMPaq diskette is inserted.
   b. The ROMPaq diskette flashes both system ROM images. If successful, a sequence of ascending audible beeps is generated. If unsuccessful, a sequence of descending audible beeps is generated and you need to repeat the disaster recovery process.
5. Power down the server ("Powering Down the Server" on page 37).
6. Remove the ROMPaq diskette.
7. Power up the server ("Powering Up the Server" on page 37).

Other Information Resources

For additional troubleshooting information, refer to the *Servers Troubleshooting Guide* on the Documentation CD.

For information on warranties and service and support upgrades (Care Pack services), refer to the HP website (http://www.hp.com/support).

Battery Replacement

If the server no longer automatically displays the correct date and time, you may need to replace the battery that provides power to the real-time clock. Under normal use, battery life is 5 to 10 years.

WARNING: The computer contains an internal lithium manganese dioxide, a vanadium pentoxide, or an alkaline battery pack. A risk of fire and burns exists if the battery pack is not properly handled. To reduce the risk of personal injury:

- **Do not attempt to recharge the battery.**
- **Do not expose the battery to temperatures higher than 60°C (140°F).**
- **Do not disassemble, crush, puncture, short external contacts, or dispose of in fire or water.**
- **Replace only with the spare designated for this product.**

To remove the component:

1. Power down the server ("Powering Down the Server" on page 37).
2. Extend or remove the server from the rack ("Extending the Server from the Rack" on page 38).
3. Remove the access panel ("Removing the Access Panel" on page 40).
4. Remove the PCI riser cage ("Removing the PCI Riser Cage" on page 40).

   CAUTION: To prevent damage to the server or expansion boards, power down the server and remove all AC power cords before removing or installing the PCI riser cage.

5. Remove the battery.

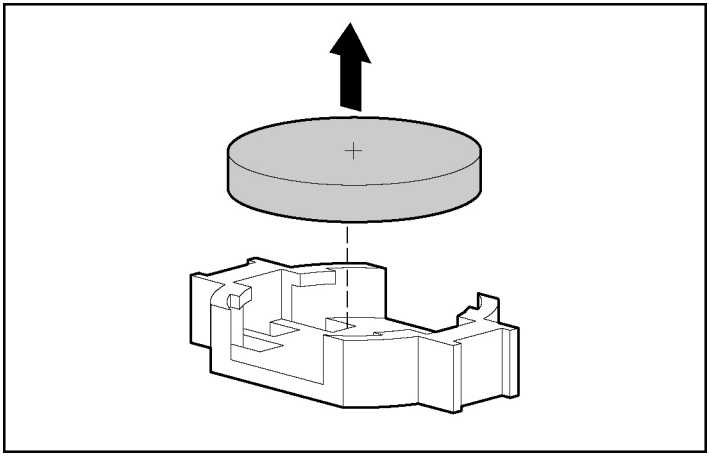

IMPORTANT: Replacing the system board battery resets the system ROM to its default configuration. After replacing the battery, reconfigure the system through RBSU.

To replace the component, reverse the removal procedure.

For more information about battery replacement or proper disposal, contact your authorized reseller or your authorized service provider.

Regulatory Compliance Notices

In This Section

Regulatory Compliance Identification Numbers 143
Federal Communications Commission Notice 144
Declaration of Conformity for Products Marked with the FCC Logo, United States Only . 145
Modifications 146
Cables 146
Mouse Compliance Statement 146
Canadian Notice (Avis Canadien) 146
European Union Notice 147
Japanese Notice 148
BSMI Notice 148
Laser Device Notices 148
Battery Replacement Notice 150

Regulatory Compliance Identification Numbers

For the purpose of regulatory compliance certifications and identification, this product has been assigned a unique series number. The series number can be found on the product nameplate label, along with all required approval markings and information. When requesting compliance information for this product, always refer to this series number. The series number is not the marketing name or model number of the product.

Federal Communications Commission Notice

Part 15 of the Federal Communications Commission (FCC) Rules and Regulations has established Radio Frequency (RF) emission limits to provide an interference-free radio frequency spectrum. Many electronic devices, including computers, generate RF energy incidental to their intended function and are, therefore, covered by these rules. These rules place computers and related peripheral devices into two classes, A and B, depending upon their intended installation. Class A devices are those that may reasonably be expected to be installed in a business or commercial environment. Class B devices are those that may reasonably be expected to be installed in a residential environment (for example, personal computers). The FCC requires devices in both classes to bear a label indicating the interference potential of the device as well as additional operating instructions for the user.

FCC Rating Label

The FCC rating label on the device shows the classification (A or B) of the equipment. Class B devices have an FCC logo or ID on the label. Class A devices do not have an FCC logo or ID on the label. After you determine the class of the device, refer to the corresponding statement.

Class A Equipment

This equipment has been tested and found to comply with the limits for a Class A digital device, pursuant to Part 15 of the FCC Rules. These limits are designed to provide reasonable protection against harmful interference when the equipment is operated in a commercial environment. This equipment generates, uses, and can radiate radio frequency energy and, if not installed and used in accordance with the instructions, may cause harmful interference to radio communications. Operation of this equipment in a residential area is likely to cause harmful interference, in which case the user will be required to correct the interference at personal expense.

Class B Equipment

This equipment has been tested and found to comply with the limits for a Class B digital device, pursuant to Part 15 of the FCC Rules. These limits are designed to provide reasonable protection against harmful interference in a residential installation. This equipment generates, uses, and can radiate radio frequency energy and, if not installed and used in accordance with the instructions, may cause harmful interference to radio communications. However, there is no guarantee that interference will not occur in a particular installation. If this equipment does cause harmful interference to radio or television reception, which can be determined by turning the equipment off and on, the user is encouraged to try to correct the interference by one or more of the following measures:

- Reorient or relocate the receiving antenna.
- Increase the separation between the equipment and receiver.
- Connect the equipment into an outlet on a circuit that is different from that to which the receiver is connected.
- Consult the dealer or an experienced radio or television technician for help.

Declaration of Conformity for Products Marked with the FCC Logo, United States Only

This device complies with Part 15 of the FCC Rules. Operation is subject to the following two conditions: (1) this device may not cause harmful interference, and (2) this device must accept any interference received, including interference that may cause undesired operation.

For questions regarding this product, contact us by mail or telephone:

- Hewlett-Packard Company
  P. O. Box 692000, Mail Stop 530113
  Houston, Texas 77269-2000
- 1-800-652-6672 (For continuous quality improvement, calls may be recorded or monitored.)

For questions regarding this FCC declaration, contact us by mail or telephone:

- Hewlett-Packard Company
  P. O. Box 692000, Mail Stop 510101
  Houston, Texas 77269-2000
- 1-281-514-3333

To identify this product, refer to the part, series, or model number found on the product.

Modifications

The FCC requires the user to be notified that any changes or modifications made to this device that are not expressly approved by Hewlett-Packard Company may void the user's authority to operate the equipment.

Cables

Connections to this device must be made with shielded cables with metallic RFI/EMI connector hoods in order to maintain compliance with FCC Rules and Regulations.

Mouse Compliance Statement

This device complies with Part 15 of the FCC Rules. Operation is subject to the following two conditions: (1) this device may not cause harmful interference, and (2) this device must accept any interference received, including interference that may cause undesired operation.

Canadian Notice (Avis Canadien)

Class A Equipment

This Class A digital apparatus meets all requirements of the Canadian Interference-Causing Equipment Regulations.

Cet appareil numérique de la classe A respecte toutes les exigences du Règlement sur le matériel brouilleur du Canada.

Class B Equipment

This Class B digital apparatus meets all requirements of the Canadian Interference-Causing Equipment Regulations.

Cet appareil numérique de la classe B respecte toutes les exigences du Règlement sur le matériel brouilleur du Canada.

European Union Notice

Products bearing the CE marking comply with the EMC Directive (89/336/EEC) and the Low Voltage Directive (73/23/EEC) issued by the Commission of the European Community and, if this product has telecommunication functionality, the R&TTE Directive (1999/5/EC).

Compliance with these directives implies conformity to the following European Norms (in parentheses are the equivalent international standards and regulations):

- EN 55022 (CISPR 22)—Electromagnetic Interference
- EN55024 (IEC61000-4-2, 3, 4, 5, 6, 8, 11)—Electromagnetic Immunity
- EN61000-3-2 (IEC61000-3-2)—Power Line Harmonics
- EN61000-3-3 (IEC61000-3-3)—Power Line Flicker
- EN 60950 (IEC60950)—Product Safety

Japanese Notice

ご使用になっている装置にVCCIマークが付いていましたら、次の説明文をお読み下さい。

この装置は、情報処理装置等電波障害自主規制協議会（VCCI）の基準に基づくクラスB情報技術装置です。この装置は、家庭環境で使用することを目的としていますが、この装置がラジオやテレビジョン受信機に近接して使用されると、受信障害を引き起こすことがあります。
取扱説明書に従って正しい取り扱いをして下さい。

VCCIマークが付いていない場合には、次の点にご注意下さい。

この装置は、情報処理装置等電波障害自主規制協議会（VCCI）の基準に基づくクラスA情報技術装置です　この装置を家庭環境で使用すると電波妨害を引き起こすことがあります。この場合には使用者が適切な対策を講ずるよう要求されることがあります。

BSMI Notice

警告使用者:

這是甲類的資訊產品，在居住的環境中使用時，可能會造成射頻干擾，在這種情況下，使用者會被要求採取某些適當的對策。

Laser Device Notices

All HP systems equipped with a laser device comply with safety standards, including International Electrotechnical Commission (IEC) 825. With specific regard to the laser, the equipment complies with laser product performance standards set by government agencies as a Class 1 laser product. The product does not emit hazardous light; the beam is totally enclosed during all modes of customer operation and maintenance.

Laser Safety Warnings

WARNING: To reduce the risk of exposure to hazardous radiation:

- **Do not try to open the laser device enclosure. There are no user-serviceable components inside.**
- **Do not operate controls, make adjustments, or perform procedures to the laser device other than those specified herein.**
- **Allow only authorized service technicians to repair the laser device.**

Compliance with CDRH Regulations

The Center for Devices and Radiological Health (CDRH) of the U.S. Food and Drug Administration implemented regulations for laser products on August 2, 1976. These regulations apply to laser products manufactured from August 1, 1976. Compliance is mandatory for products marketed in the United States.

Compliance with International Regulations

All HP systems equipped with laser devices comply with appropriate safety standards including IEC 825.

Laser Product Label

The following label or equivalent is located on the surface of the laser product.

This label indicates that the product is classified as a Class 1 laser product.

Laser Information

Feature	Description
Laser type	Semiconductor GaAlAs
Wave length	780 nm +/- 35 nm
Divergence angle	53.5 degrees +/- 0.5 degrees
Output power	Less than 0.2 mW or 10,869 W m-2 sr-1
Polarization	Circular 0.25
Numerical aperture	0.45 inches +/- 0.04 inches

Battery Replacement Notice

WARNING: The computer contains an internal lithium manganese dioxide, a vanadium pentoxide, or an alkaline battery pack. A risk of fire and burns exists if the battery pack is not properly handled. To reduce the risk of personal injury:

- **Do not attempt to recharge the battery.**
- **Do not expose the battery to temperatures higher than 60°C (140°F).**
- **Do not disassemble, crush, puncture, short external contacts, or dispose of in fire or water.**

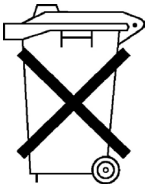

Batteries, battery packs, and accumulators should not be disposed of together with the general household waste. To forward them to recycling or proper disposal, please use the public collection system or return them to HP, an authorized HP Partner, or their agents.

For more information about battery replacement or proper disposal, contact an authorized reseller or an authorized service provider.

Electrostatic Discharge

In This Section

Preventing Electrostatic Discharge.....151
Grounding Methods to Prevent Electrostatic Discharge.....152

Preventing Electrostatic Discharge

To prevent damaging the system, be aware of the precautions you need to follow when setting up the system or handling parts. A discharge of static electricity from a finger or other conductor may damage system boards or other static-sensitive devices. This type of damage may reduce the life expectancy of the device.

To prevent electrostatic damage:

- Avoid hand contact by transporting and storing products in static-safe containers.
- Keep electrostatic-sensitive parts in their containers until they arrive at static-free workstations.
- Place parts on a grounded surface before removing them from their containers.
- Avoid touching pins, leads, or circuitry.
- Always be properly grounded when touching a static-sensitive component or assembly.

Grounding Methods to Prevent Electrostatic Discharge

Several methods are used for grounding. Use one or more of the following methods when handling or installing electrostatic-sensitive parts:

- Use a wrist strap connected by a ground cord to a grounded workstation or computer chassis. Wrist straps are flexible straps with a minimum of 1 megohm ±10 percent resistance in the ground cords. To provide proper ground, wear the strap snug against the skin.
- Use heel straps, toe straps, or boot straps at standing workstations. Wear the straps on both feet when standing on conductive floors or dissipating floor mats.
- Use conductive field service tools.
- Use a portable field service kit with a folding static-dissipating work mat.

If you do not have any of the suggested equipment for proper grounding, have an authorized reseller install the part.

For more information on static electricity or assistance with product installation, contact your authorized reseller.

Server Specifications

In This Section

Server Specifications 153
Environmental Specifications 154

Server Specifications

Dimensions	
Height	8.59 cm (3.38 in)
Depth	65.45 cm (25.75 in)
Width	44.45 cm (17.50 in)
Weight (maximum)	27.22 kg (60 lb)
Weight (no drives installed)	20.41 kg (47.18 lb)
Input requirements	
Rated input voltage	100 VAC to 240 VAC
Rated input frequency	50 Hz to 60 Hz
Rated input current	6 A (110 V) to 3 A (220 V)
Rated input power	600 W
BTUs per hour	2050
Power supply output	
Rated steady-state power	400 W
Maximum peak power	400 W

Environmental Specifications

Temperature range	
Operating	10°C to 35°C (50°F to 95°F)
Shipping	-40°C to 70°C (-40°F to 158°F)
Maximum wet bulb temperature	28°C (82.4°F)
NOTE: All temperature ratings shown are for sea level. An altitude derating of 1°C per 300 m (1.8°F per 1,000 ft to 10,000 ft) is applicable. No direct sunlight allowed.	
Relative humidity (noncondensing)	
Operating	10% to 90%
Non-operating	5% to 95%
NOTE: Storage maximum humidity of 95% is based on a maximum temperature of 45°C (113°F). Altitude maximum for storage corresponds to a pressure minimum of 70 KPa.	

Technical Support

In This Section

Related Documents 155
HP Contact Information 155
Before You Contact HP 155

Related Documents

For related documentation, refer to the Documentation CD.

HP Contact Information

For the name of the nearest HP authorized reseller:

- In the United States, call 1-800-345-1518.
- In Canada, call 1-800-263-5868.
- In other locations, refer to the HP website (http://www.hp.com).

For HP technical support:

- In North America, call the HP Technical Support Phone Center at 1-800-652-6672. This service is available 24 hours a day, 7 days a week. For continuous quality improvement, calls may be recorded or monitored.
- Outside North America, call the nearest HP Technical Support Phone Center. For telephone numbers for worldwide Technical Support Centers, refer to the HP website (http://www.hp.com).

Before You Contact HP

Be sure to have the following information available before you call HP:

- Technical support registration number (if applicable)

- Product serial number
- Product model name and number
- Applicable error messages
- Add-on boards or hardware
- Third-party hardware or software
- Operating system type and revision level

Acronyms and Abbreviations

ABEND

abnormal end

ACU

Array Configuration Utility

ASR

Automatic Server Recovery

DDR

double data rate

DIMM

dual inline memory module

ECC

error checking and correcting

IEC

International Electrotechnical Commission

iLO

Integrated Lights-Out

IML

Integrated Management Log

IPL

initial program load

IRQ

interrupt request

MPS

multi-processor specification

NEMA

National Electrical Manufacturers Association

NFPA

National Fire Protection Association

NIC

network interface controller

NMI

non-maskable interrupt

NVRAM

non-volatile memory

ORCA

Option ROM Configuration for Arrays

PCI-X

peripheral component interconnect extended

PDU

power distribution unit

POST

Power-On Self-Test

PPM

Processor Power Module

PXE

preboot execution environment

RBSU

ROM-Based Setup Utility

RILOE II

Remote Insight Lights-Out Edition II

SDRAM

synchronous dynamic RAM

TMRA

recommended ambient operating temperature

UID

unit identification

VHDCI

very high density cable interconnect

WOL

Wake on LAN

Index

A

AC power supply 15, 84
access panel 40
additional information 140, 155
administrator information 114
administrator password 114
Advanced Memory Protection 112
airflow requirements 47
array configuration 72, 109, 116
ASR-2 (Automatic Server Recovery-2) 113, 126, 130
authorized reseller 155
auto-configuration process 116
Automatic Server Recovery-2 (ASR-2) 126, 130
Autorun Menu 122

B

battery 141, 150
Battery-Backed Write Cache Enabler 77
Battery-Backed Write Cache Enabler LEDs 34, 35
BIOS upgrade 120
blue screen event 18
boot options 117
boot order 113
BSMI notice 148
buttons 9

C

cable management arm 51, 52
cables 99, 146
cabling 52, 99
Canadian Notice 146
Care Pack 45, 140
CD-ROM drive 10, 105
CD-ROM drive connectors 17, 24
chassis ID switch 17, 19
components 9
configuration of system 62, 63, 111, 116
configuration utilities 111
connectors 9
crash dump analysis 18

D

date and time 113
DC power supply 15, 87
Declaration of Conformity 145
diagnostic steps 132
diagnostic tools 111, 120, 122, 126
diagnostics utility 124
DIMM slot LEDs 20, 22
DIMM slots 17, 19
DIMMs 69, 70, 71
disaster recovery 139
diskette boot control 18
diskette drive 10, 106, 112
diskette drive connectors 17, 24
diskette write control 112
drive bays 10
drivers 124
drives, configuring 72
duplex SCSI hard drive configuration 72, 101, 102

E

electrical grounding requirements 50
electrostatic discharge 151
Enterprise Diagnostics LX32 Utility 124
environmental requirements 47, 154
European Union notice 147
expansion boards 91, 94, 95, 113
expansion slot covers, removing 91, 92
expansion slot LEDs 15, 29, 30
expansion slots 13
extending server from rack 38
external health LED 11, 135
external storage cabling 109

F

F1 prompt 115
fan connectors 17
fan LED 22, 33
fans 32, 79, 82, 129
features 9
Federal Communications Commission (FCC) Notice 144, 145, 146
flash ROM 120
front panel components 10
front panel LEDs 11

G

grounding methods 152
grounding requirements 50

H

hard drive blanks 73
hard drive LEDs 26, 28
hard drives 10, 26, 28, 72, 74, 99
hardware options installation 52, 65
hardware, minimum configuration 129
Health Driver 22, 79, 113, 126
health LEDs 11, 22, 135
hot-plug reservation mode 115
Hyper-Threading 115

I

I/O zone fans 32
identification number, server 143
iLO (Integrated Lights-Out) 13, 18
Insight Manager 7 125
installation services 45
installing operating system 63
Installing Rack Products video 46
Integrated Management Display (IMD) 114
Integrated Management Log (IML) 126
internal health LED 11, 22, 136
interrupt request (IRQ) 113
IPL (Initial Program Load) device 113

J

Japanese notice 148

K

keyboard connector 13

L

language selection, RBSU 116
laser devices 148
LEDs 9

M

Management Agents 125
memory 69, 70, 71
memory dump 18
memory slot LEDs 20, 22
memory slots 17, 19
minimum hardware configuration 129
mouse compliance statement 146
mouse connector 13
MPS table mode 115

N

network connector LEDs 15
Network Server Mode 114
NIC (network interface controller) 112
NIC connectors 13
NIC LEDs 11
NMI switch 17, 18, 115
NUMLOCK, disabling 112
NVRAM, clearing 18, 115, 138

O

Online ROM Flash Component Utility 121
online spare memory 69, 70, 118
online spare memory LED 20, 22
operating system crash 18
operating systems 63, 112
optimum environment 47

options installation 52, 65
ORCA (Option ROM Configuration for Arrays) 109, 116, 124
overtemperature LED 20, 22

P

PCI array controllers, cabling 101, 102
PCI Hot Plug backplane cabling 107
PCI Hot Plug features 95
PCI Hot Plug LEDs 15, 29, 30
PCI riser cage 31, 40, 42
PCI riser cage connector 17
PCI riser cage LED 31
POST F1 prompt 115
POST speed up 115
POST troubleshooting 130
power button cabling 106
power connectors, internal 17, 24
power converter module cabling 108
power converter module LED 22, 34
power cord connector 13
power distribution unit 50
power LEDs, system 11
Power On/Standby button 11, 37, 106
power requirements 49, 153
power supplies 15, 84, 87
power supply LEDs 15
power supply signal connector 17
power supply zone fans 32
powering down 37
powering up 37
power-on password 18, 114
powerup sequence 130
PPM failure LEDs 20, 22
PPM slots 17
processor failure LEDs 20, 22
processor zone fans 32
processors 17, 115
product registration 63
ProLiant Essentials Foundation Pack 63, 124, 125, 126
PXE (preboot execution environment) 112

Q

Quicklock 114

R

Rack Builder Pro Configuration Tool 46
rack installation 45, 46, 50, 52
Rack Products Documentation CD 46
rack resources 46
rack-mounting hardware 51
RAID levels 116
RBSU (ROM-Based Setup Utility) 111
rear panel connectors 13
redundant ROM 115, 119
registering the server 63
regulatory compliance notices 143
Remote Insight Lights-Out Edition board 31, 108
remote management connector 31
required information 155
resetting the system 18
RILOE II (Remote Insight Lights-Out Edition II) 31, 91, 101, 102, 108
riser interlock LED 20, 22
RJ-45 connectors 13
RJ-45 network connector LEDs 15
ROM legacy USB support 121
ROM redundancy 119
ROM-Based Setup Utility (RBSU) 111
ROMPaq Disaster Recovery 139
ROMPaq utility 119, 120

S

SCSI backplane components 24
SCSI backplane LEDs 22, 25, 99
SCSI cabling 99
SCSI connectors 17, 24
SCSI IDs 72
SCSI terminator 101, 102, 103, 104
serial connector 13, 112
serial number 112, 118
series number 143
server asset text 114

server features and options 65
server reference information 114
server setup 45
service contact information 114
shipping carton contents 51
simplex SCSI hard drive configuration 72, 100, 101
site requirements 47
Smart Array 5i Plus Controller 77, 99
Smart Array 5i Plus Memory Module 17
SmartStart Autorun Menu 122
SmartStart Scripting Toolkit 123
SmartStart software 63, 122, 138, 139
space requirements 47
specifications, server 153, 154
static electricity 151
storage, external 109
support packs 122
Survey Utility 126
switches 17
system board battery 141, 150
system board components 17
system board LEDs 20
system configuration settings 112
system maintenance switch 17, 18
system power connector 17
system power LED 11, 134, 135

T

tape drives 10, 75
technical support 155
telephone numbers 155
temperature requirements 48, 154
temperature, overtemperature LED 20, 22
thermal shutdown 113
troubleshooting 129

U

UID LEDs 11, 15, 37
USB connectors 13
USB support 121
utilities 111, 120, 121, 123, 124, 126

V

ventilation 47
VHDCI SCSI connector 13, 109
video connector 13
video problems 137

W

Wake-On LAN (WOL) 115